WHERE GREAT IDEAS START

RANSOMES

BOB-CAT®

LYNX™
MODEL: XT2000

COVERS THE FOLLOWING SERIES:
POWER UNITS: XTB43012 & XTB43022
CUTTER DECKS: XDTBS420, XDTBS421 & XDTBS422
GRASS CATCHERS: XGDXS120 & XGDXS121

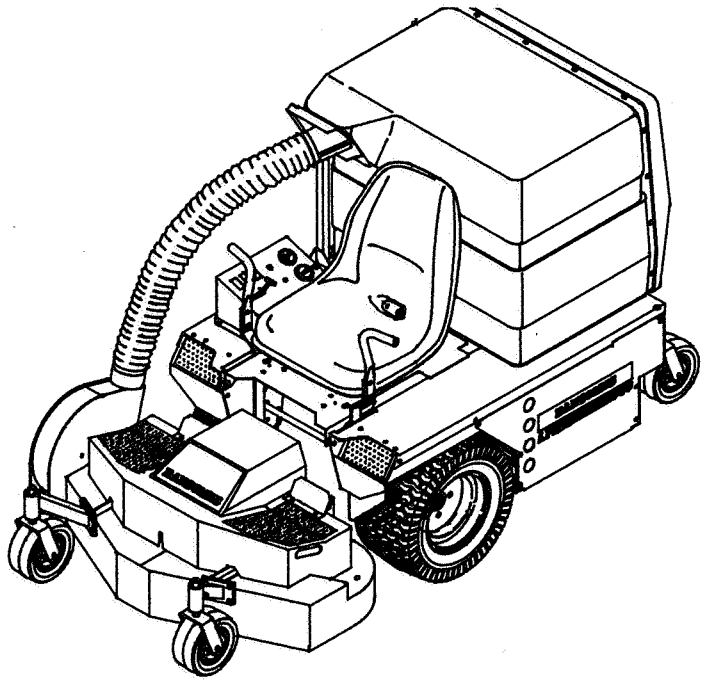

PARTS MANUAL
COMMERCIAL MOWER

PRINTED IN U.S.A.

5/92 P/N-188051

CONTENTS

DESCRIPTION	FIGURE	PAGE
ENGINE & CLUTCH ASSY	1A	2,3
HYDRAULICS	2A	4,5
CONTROLS	3A	6,7
EXTERIOR PARTS	4A	8,9
DRIVE WHEELS & CASTERS	5A	10,11
ENGINE GAS TANK & MISC.	6A	12,13
CUTTER DECK & GEAR BOX (P/N-XDTBS420)	7A	14,15
CUTTER DECK PULLEYS (P/N-XDTBS420)	8A	16,17
GRASS BOX(XGDXS120)	9A	18,19
BELTS	10A	20,21
HYDRO GEAR ZTR ASSEMBLY	11A	22,23
HYDRO GEAR TRANSMISSION	12A	24,25
DECALS	13A	26,27
CONTROL PANEL	14A	28,29
ELECTRIC CABLES	15A	30,31
LOWER WIRE HARNESS	16A	32
UPPER WIRE HARNESS (Used prior to Serial No. 00283)	17A	33
UPPER WIRE HARNESS (Used after Serial No. 00282)	18A	34
OPTIONAL GRASS BASKETS	19A	35
VON RUDEN GEAR BOX	20A	36,37
CROSS REFERENCE		38

IMPORTANT! READ!

You have purchased a first class mower and the useful life you obtain from your machine depends to a large extent on proper maintenance and operation. Before attempting to use your mower, read your Operators Manual carefully. Make yourself familiar with the operation, controls, adjustments, lubrication and maintenance sections.

ALL references to left and right are from operators position.

TORQUE SPECIFICATIONS

RECOMMENDED TORQUES FOR THESE GRADES OF FASTENERS

THREAD SIZE	GRADE 5	GRADE 8
6-32	20 IN-LB	——
8-32	24 IN-LB	30 IN-LB
10-24	35 IN-LB	45 IN-LB
10-32	40 IN-LB	50 IN-LB
12-24	50 IN-LB	65 IN-LB
1/4-20	95 IN-LB	125 IN-LB
1/4-28	95 IN-LB	150 IN-LB
5/16-18	200 IN-LB	270 IN-LB
5/16-24	240 IN-LB	300 IN-LB
3/8-16	30 FT-LB	40 FT-LB
3/8-24	35 FT-LB	45 FT-LB
7/16-14	50 FT-LB	65 FT-LB
7/16-20	55 FT-LB	70 FT-LB
1/2-13	75 FT-LB	100 FT-LB
1/2-20	85 FT-LB	110 FT-LB
9/16-12	105 FT-LB	135 FT-LB
9/16-18	115 FT-LB	150 FT-LB
5/8-11	150 FT-LB	195 FT-LB
5/8-18	160 FT-LB	210 FT-LB
3/4-10	170 FT-LB	220 FT-LB
3/4-16	175 FT-LB	225 FT-LB
7/8-14	300 FT-LB	400 FT-LB

USE THESE SPECIFICATIONS UNLESS OTHERWISE NOTED.

SPECIFIC TORQUES:

BLADE BOLT-125 FT-LBS

GRADE 5 

GRADE 8 

RANSOMES INC. USES GRADE 5 BOLTS AS STANDARD, UNLESS OTHERWISE NOTED.

ENGINE & CLUTCH ASSEMBLY

RANSOMES
BOB-CAT®

FIGURE 1A

LYNX 2000

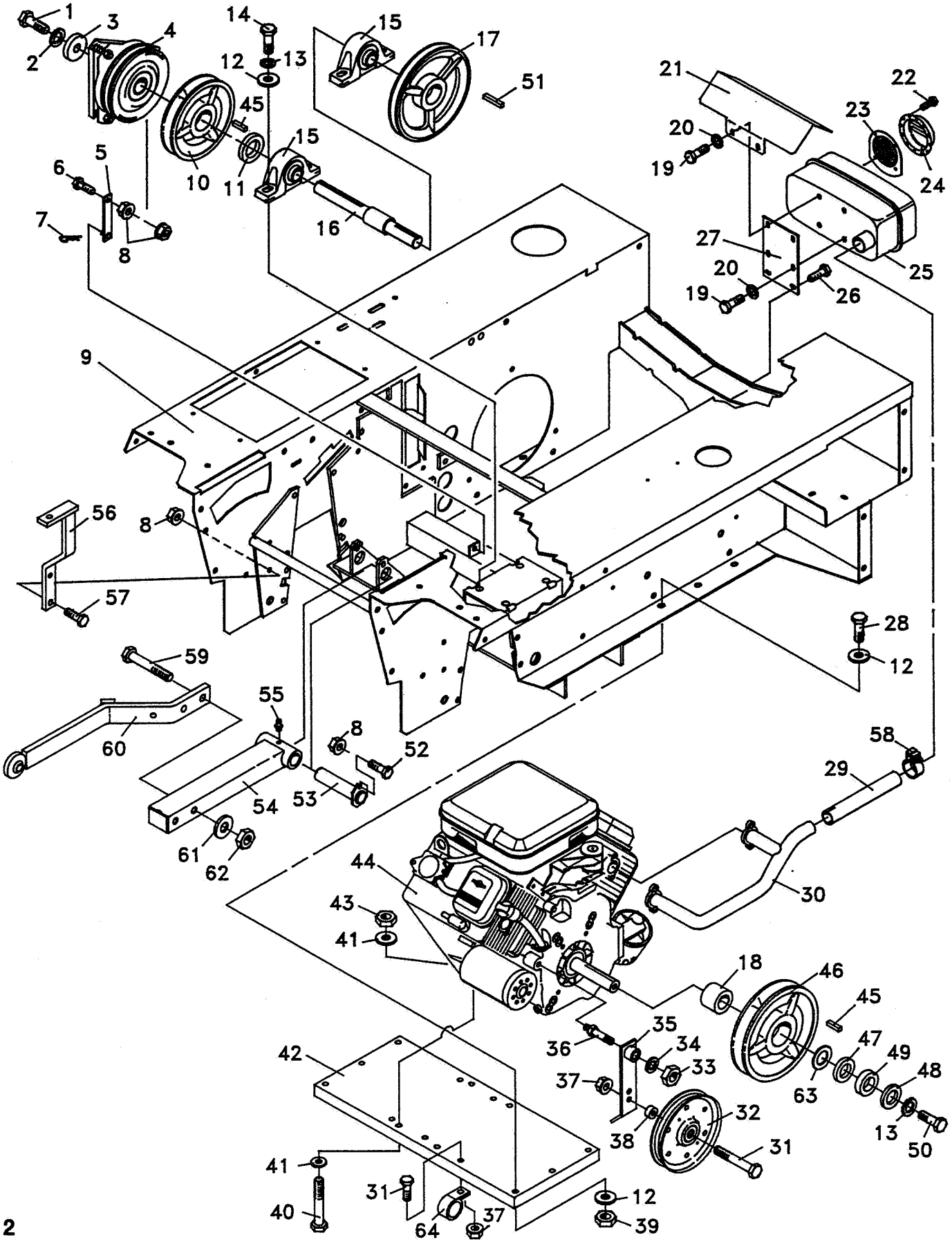

ENGINE & CLUTCH ASSEMBLY

FIGURE 1A

ITEM	PART No.	DESCRIPTION	QTY
1-1	64123-122	BOLT-HEX 7/16-20X1-1/2	1
1-2	64006-06	LOCKWSHR-HELICAL 7/16	1
1-3	64163-63	WSHR .453X1.63X.313	1
1-4	188019	CLUTCH-ELECTRIC	1
1-5	186035	CLUTCH BRACKET	1
1-6	64123-68	BOLT-HEX 5/16-18X1	1
1-7	64168-2	HAIRPIN COTTER	1
1-8	64141-6	NUT-WLF 5/16-18	8
1-9	186064	S LYNX FRAME W/LABS	1
1-10	181006	PULLEY-SNGL GRVE 6.40	2
1-11	64163-07	1-1/32X1-3/4X1/4 WASH	1
1-12	64163-31	WASH.25/64X1X12 GA	16
1-13	64006-03	LOCKWSHR-HELICAL 3/8	5
1-14	64123-70	BOLT-HEX 3/8-16X1-1/2	4
1-15	188040	BRG-PILLOW BLOCK 1.00	2
1-16	183022	SHAFT-JACK	1
1-17	181008	PULLEY-SNGL GRVE 7.80	1
1-18	33181	SPACER-SPINDLE	1
1-19	64123-89	BOLT-HEX 1/4-20X3/4	4
1-20	64006-01	LOCKWSHR-HELICAL 1/4	4
1-21	182205	GUARD-MUFFLER	1
1-22	64152-42	#8-18X.38 S-TAP SCREW	4
1-23 *	B222902	DEFLECTOR-LOUVERED	1
1-24 *	B392154	ASM-SPARK ARRESTER	1
1-25 *	108264	MUFFLER, B&S 493963	1
1-26	64152-27	1/4-20X5/8 LG SP SCREW	2
1-27	182168	BRKT-MUFFLER	1
1-28	64123-87	BOLT-HEX 3/8-16X1-3/4	6
1-29	183037	TUBE-EXHAUST	1
1-30 *	188029	MANIFOLD, B&S #805403	1
1-31	64123-87	BOLT-HEX 3/8-16X1-3/4	2
1-32	38297	IDLER, 5"OD FLANGED	1
1-33	64151-7	1/2-13 HEX LOCK NUT	1
1-34	64163-67	WSHR .516X1X12GA	1
1-35	186030	ENGINE IDLER	1
1-36	183027	STUD-IDLER	1
1-37	64141-4	NUT-WLF 3/8-16	2
1-38	33030-07	BUSHING, IDLER	1
1-39	64151-18	3/8-16 CL HEX NUT	6
1-40	64123-12	BOLT-HEX 5/16-18X2-1/2	4
1-41	64163-55	WSHR .328X.75X14 GA	8
1-42	182157	PLATE-ENGINE	1
	(LATER MACHINES USE 182215)		
1-43	64151-15	5/16-18 CL HEX NUT	4
1-44 *	108266	ENGINE-B&S V16 HOR	1
1-45	64164-12	1/4X1/4X1 SQ END KEY	2
1-46	31012A	ENGINE PULLEY	1
1-47	64163-22	1-1/32X1-3/4X1/2 WASHR	1
1-48	64163-63	WSHR .453X1.63X.313	1
1-49	64163-07	1-1/32X1-3/4X1/4 WASH	1
1-50	64123-21	BOLT-HEX 3/8-24X1-1/4	1
1-51	64164-13	1/4X1/4X2 SQ KEY	1
1-52	64123-54	BOLT-HEX 5/16-18X3/4	2
1-53	186044	PIVOT PIN	2
1-54	186043	POWER UNIT ARM (INCLUDES ITEM 55)	2
1-55	85010N	ZERK GREASE FITTING	2
1-56	186055	SPRING SUPPT RH	1
**	186054	SPRING SUPPT LH	1
1-57	64123-47	BOLT-HEX 5/16-18X1-1/4	4
1-58	35014N	MUFFLER CLAMP	1
1-59	64123-95	BOLT-HEX 1/2-13X3-1/4	4
1-60	186075	LIFT ARM	2
1-61	64163-19	33/64X1-1/4X12GA WSHR	4
1-62	64151-7	1/2-13 HEX LOCK NUT	4
1-63	62464-7A	WSHR,THRUST 1.0X1.56	1
1-64	48228-2A	CLIP	1

** NOT ILLUSTRATED

* SEE BRIGGS & STRATTON DEALER
RANSOMES DOES NOT SERVICE

FIGURE 2A

LYNX 2000

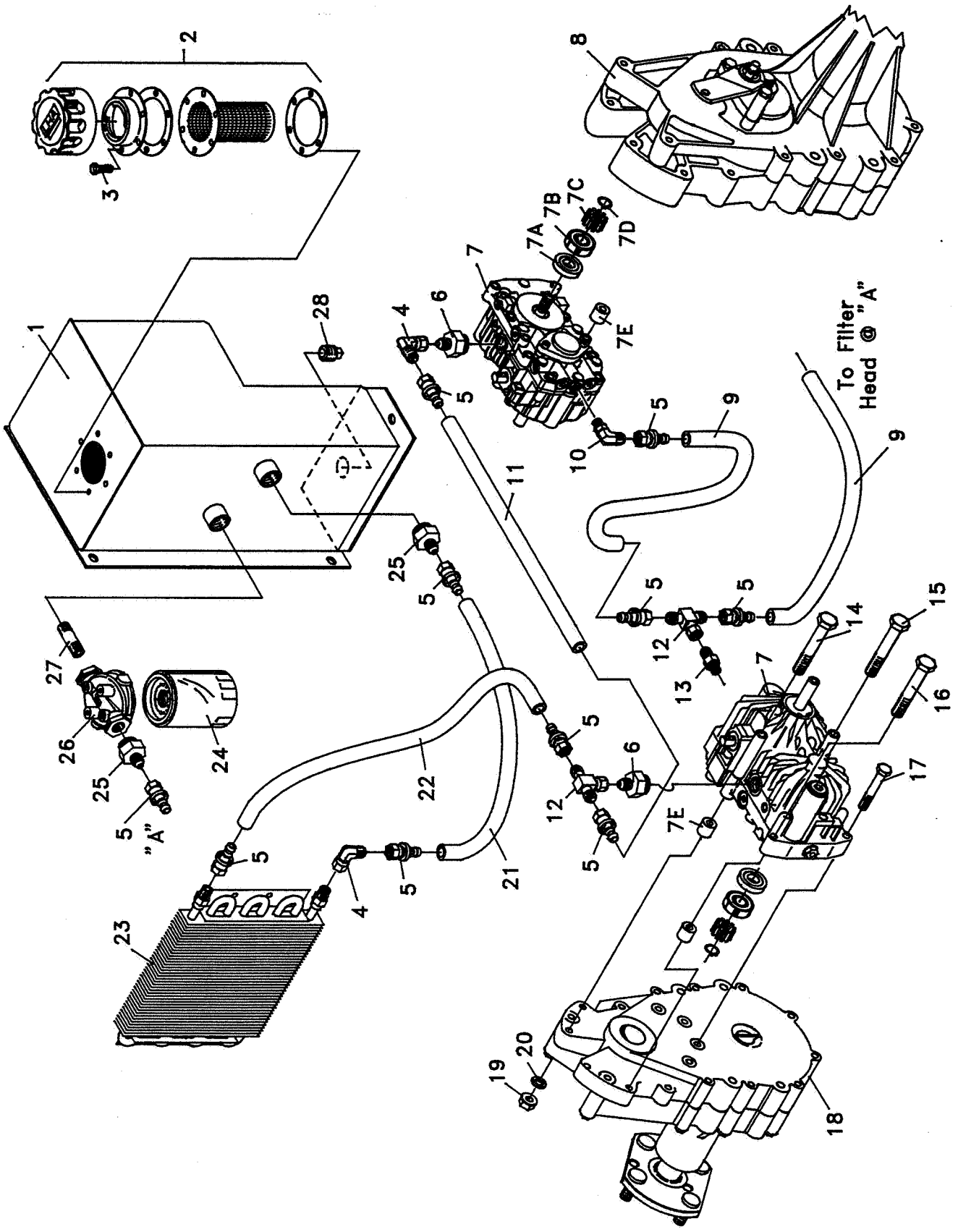

ITEM	PART No.	DESCRIPTION	QTY
2-1	186041	HYDRO TANK	1
2-2	108103	FILLER-BREATHER ASSY	1
2-2A	108103-01	CAP & FLANGE	1
2-2B	108103-03	NYLON BASKET	1
2-2C	108103-05	GASKET	2
2-3	64152-46	SCR-SLT HH 10-24X1/2	6
2-4	48086	90 SWIVEL	2
2-5	69067-01	FTG-SWIVEL 9/16-18	10
2-6	48089-05	FTG-STRAIGHT, MALE	2
2-7	188059	TRNSMSN, BDU-10L-111	2
(SEE FIG 12, P 24-25 FOR PARTS BREAKDOWN)			
2-7A	188059-02	BEARING SPACER	2
2-7B	188059-05	BALL BEARING	2
2-7C	188059-03	GEAR	2
2-7D	188059-04	RETAINING RING	2
2-7E	188059-01	SPACER	6
2-8	188058	ASSY-ZERO TURN LH	1
(SEE FIG 11, P 22-23 FOR PARTS BREAKDOWN)			
2-9	69208-05	S HOSE-3/8 X 23.50	2
2-10	108035-09	ELBW-ADJ3/8 37DX7/16	1
2-11	69208-02	S HOSE-3/8 X 14.25	1
2-12	69066-01	FTG,SWIVEL TEE 9/16-18	2
2-13	48089-04	STRAIGHT THRD O RING	1
2-14	64123-141	BOLT-HEX 5/16-18X6	2
2-15	64123-194	BOLT-HEX 5/16-18X5-1/2	2
2-16	64123-12	BOLT-HEX 5/16-18X2-1/2	2
2-17	64123-61	BOLT-HEX 5/16-18X1-3/4	2
2-18	188057	ASSY-ZERO TURN RH	1
2-19	64025-02	NUT-HEX 5/16-18	2
2-20	64006-02	LCKWSHR-HELICAL 5/16	2
2-21	69208-04	S HOSE-3/8 X 21.00	1
2-22	69208-01	S HOSE-3/8 X 11.75	1
2-23	108207	COOLER OIL	1
2-24	108046	FILTER ELEMENT	1
2-25	69064-01	FTG-NPTF 9/16-18	2
2-26	188016	FILTER HEAD ASSY	1
2-27	48024-1A	S NIPPLE,PIPE 1-1/2 LG	1
2-28	108029	MAGNETIC PLUG	1

ITEM	PART No.	DESCRIPTION	QTY

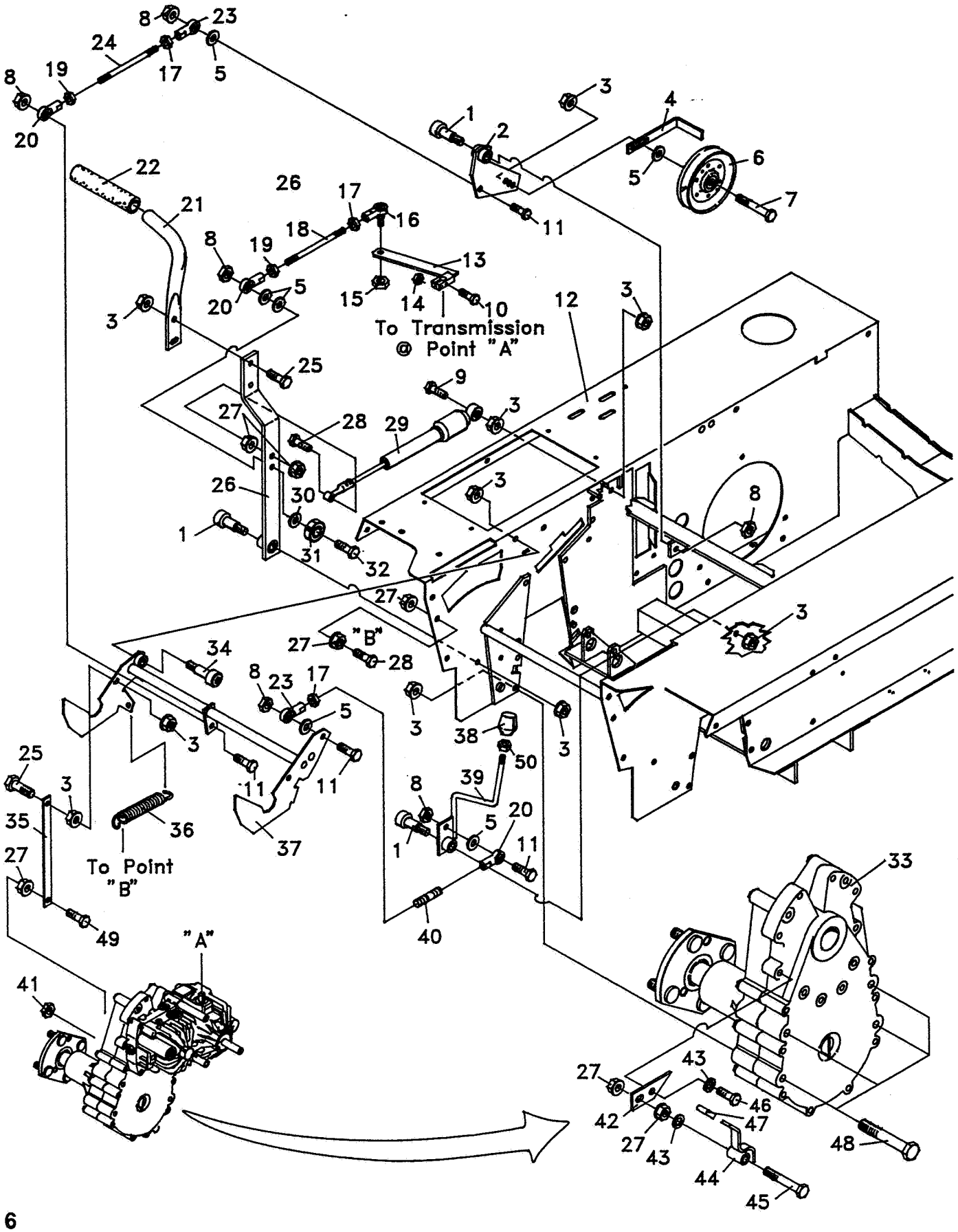
To Transmission @ Point "A"
To Point "B"
"A"
"B"

ITEM	PART No.	DESCRIPTION	QTY
3-1	64166-14	BOLT SH 3/8-16X.49X1.25	3
3-2	186029	IDLER BRKT	1
	(INCLUDES BEARINGS 188024-01 QTY-2)		
3-3	64141-4	NUT-WLF 3/8-16	22
3-4	32345-02	BELT GUIDE	1
3-5	64163-31	WASH.25/64X1X12 GA	8
3-6	48393	PULLEY-V IDLER	1
3-7	64123-87	BOLT-HEX 3/8-16X1-3/4	1
3-8	64151-18	3/8-16 CL HEX NUT	7
3-9	64123-100	BOLT-HEX 3/8-16X2-1/4	2
3-10	64205-016	BOLT-METRIC M5-0.8X25	4
3-11	64123-16	BOLT-HEX 3/8-16X1-1/4	4
3-12	186064	S LYNX FRAME W/LABS	1
3-13	186024	PUMP ARM,RH	1
*	186023	PUMP ARM,LH	1
3-14	64237-01	LOCKNUT-NYLON M5X0.8	4
3-15	64141-3	NUT-WLF 3/8-24	2
3-16	48109N	BALL JOINT	2
3-17	64001-2	NUT-HEX JAM,3/8-24	4
3-18	183020-02	CONTROL LINK-RIGHT	1
	(USE 183020-01 ON L.H. SIDE)		
3-19	64001-7	NUT-HEX JAM,3/8-24 LH	3
3-20	188032	BALL JOINT	4
3-21	183021-02	HANDLE-RH	1
*	183021-01	HANDLE-LH	1
3-22	188039	GRIP-HANDLE	2
3-23	138011	BALL JOINT	2
3-24	183020-03	LINK-CLUTCH	1
3-25	64123-50	BOLT-HEX 3/8-16X1	6
3-26	186052	STEERING ARM	2
	(INCLUDES BEARINGS 188024-01 QTY-2)		
3-27	64141-6	NUT-WLF 5/16-18	10
3-28	64123-69	BOLT-HEX 5/16-18X1-1/2	4
3-29	188034	STABILIZER	2
3-30	64163-69	WASHER .391X.88X10 GA	2
3-31	188042	BEARING-6300	2
3-32	64123-67	BOLT-HEX 3/8-16X2	2
3-33	188057	ASSY-ZERO TURN RH	1
3-34	64166-16	SHLDR BOLT,3/8-16X1.38	2
3-35	182115	LINK BRAKE	2
3-36	188025	SPRING-NEUTRAL ARM	2
3-37	186031	NEUTRAL ARM	1
	(INCLUDES BEARINGS 188024-01 QTY-2)		
3-38	68156A	HANDLE KNOB, BLACK	1
3-39	186026	BRAKE LEVER	1
	(INCLUDES BEARINGS 188024-01 QTY-2)		
3-40	183019	TIE ROD, 3/8X1-3/4	1
3-41	64151-15	5/16-18 CL HEX NUT	2
3-42	182048	PLATE COAST	2
3-43	64006-02	LOCKWSHR-HELICAL 5/16	4
3-44	186014	SWITCH LEVER	2
3-45	64123-61	BOLT-HEX 5/16-18X1-3/4	2
3-46	64123-54	BOLT-HEX 5/16-18X3/4	2
3-47	188007	CAP-SWITCH LEVER	2
3-48	64123-138	BOLT-HEX 3/8-16X3-3/4	8
3-49	64123-68	BOLT-HEX 5/16-18X1	2
3-50	64001-6	3/8-16 LAM NUT	1

* NOT ILLUSTRATED

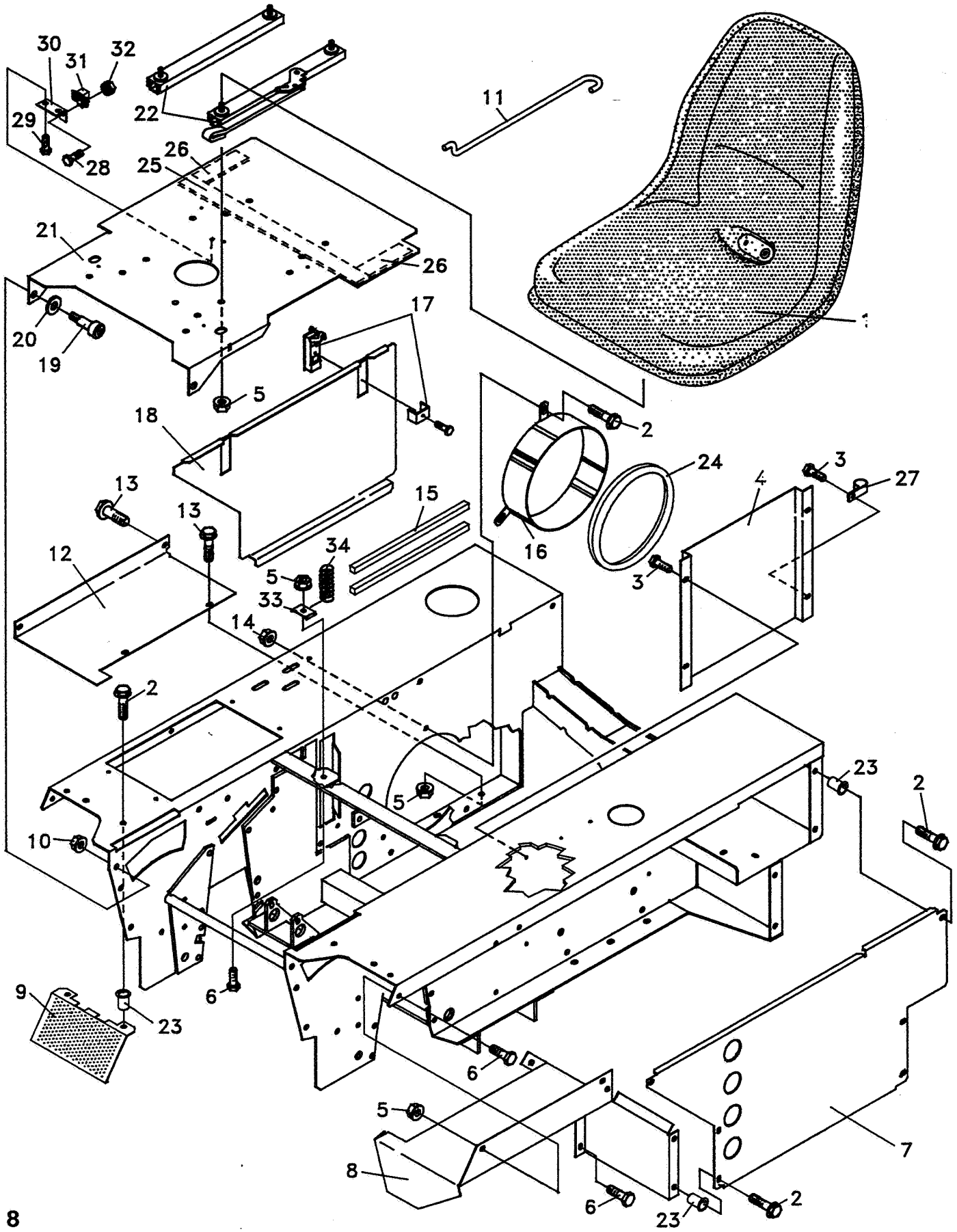
30
31
32
29
28
22
11
26
25
21
26
20
19
17
5
18
2
24
3
27
4
13
13
15
12
34
5
33
16
3
14
2
23
2
5
10
9
23
6
6
5
8
7
6
23
2

ITEM	PART No.	DESCRIPTION	QTY
4-1	188052	SEAT-OPERATOR	1
4-2	64139-02	BOLT-WLF 1/4-20X1/2	13
4-3	64152-23	1/4-20X3/8 LG SP SCREW	4
4-4	182122	SHIELD-HEAT	1
4-5	64141-6	NUT-WLF 5/16-18	20
4-6	64123-54	BOLT-HEX 5/16-18X3/4	11
4-7	186067	S LYNX LH PANEL W/LAB	1
4-8	182158-01	FENDER-LH	1
*	182158-02	FENDER-RH	1
4-9	182077	SCREEN-FRONT	2
4-10	64141-4	NUT-WLF 3/8-16	2
4-11	183041	SEAT CATCH	1
4-12	182164	PLATE-FILTER	1
4-13	64139-08	BOLT-WLF 5/16-18X3/4	4
4-14	64141-2	NUT-WLF 1/4-20	3
4-15	48450-09	FOAM-.5X12.1X.5	2
4-16	186048	INTAKE RING	1
4-17	178141	LATCH-LEVER	2
4-18	186068	S LYNX RH PANEL W/LAB	1
4-19	64166-5	1/2X1 3/8-16 SHLD BOLT	2
4-20	64163-36	WASHER 1X33/64X.187	2
4-21	186039	SEAT PLATE	1
4-22	158140	SEAT SLIDE RAILS	1
	(INCLUDES HARDWARE)		
4-23	188033-01	INSERT-GRIP 1/4-20	10
4-24	108194-14	FLEX TRIM-26.88	1
4-25	38471-05	FOAM CLOSED CELL 17"	1
4-26	38471-04	FOAM CLOSED CELL 6.5	2
4-27	48228A	CLIP	1
4-28	64197-007	BOLT #12-24 X 3/8"	2
4-29	64152-21	#6-32 X 1/2" SCREW	2
4-30	182220	BRACKET-ROD CLIP	1
4-31	138040	CLIP-HOOD ROD	1
4-32	64025-26	#6 NUT	2
4-33	112134	CLIP, SPRING	2
4-34	118035	SPRING	2

* NOT ILLUSTRATED

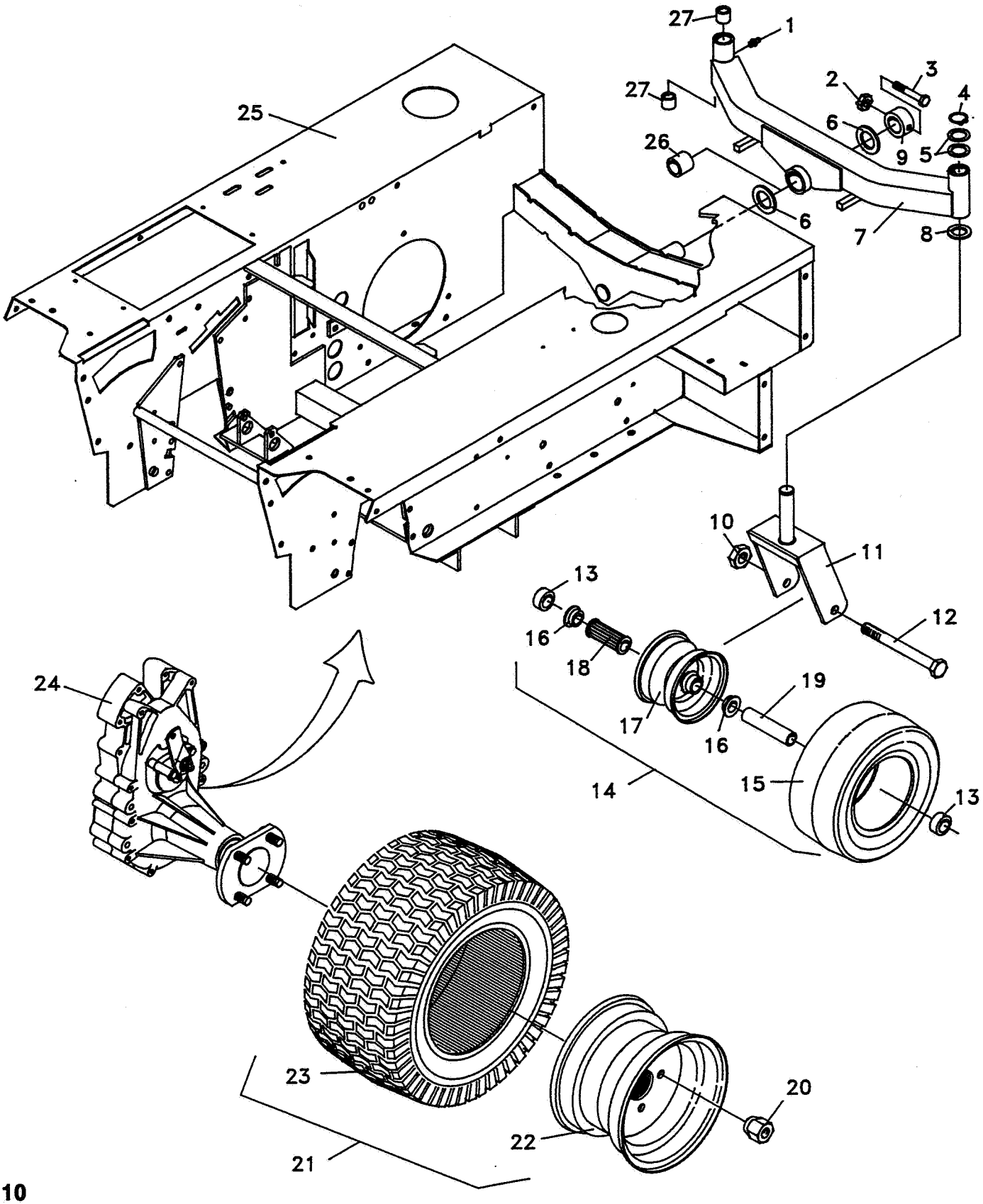
27
1
27
2
3
4
6
9
5
26
6
7
8
25
10
11
13
12
16
18
19
17
16
14
15
13
24
23
20
22
21

ITEM	PART No.	DESCRIPTION	QTY
5-1	85010N	ZERK GREASE FITTING	3
5-2	64151-18	3/8-16 CL HEX NUT	1
5-3	64123-82	BOLT-HEX 3/8-16X2-1/2	1
5-4	64144-13	RETAINING RING	2
5-5	62464-7A	WSHR,THRST 1.0X1.56	4
5-6	108057	THRUST BEARING 1-1/4ID	2
5-7	186040	REAR AXLE	1
	(INCLUDES ITEMS 26 & 27)		
5-8	48049A	THRUST BEARING	2
5-9	183030	RETAINER-AXLE	1
5-10	64151-6	5/8-11 HEX LOCK NUT	2
5-11	186060	S CASTER YOKE	2
5-12	64123-118	BOLT-HEX 5/8-11X5-3/4	2
5-13	183040	SPCR-.75IDX1ODX.5LNG	2
5-14	148045	WHEEL&TIRE 11X4.0-5	2
	(INCLUDES ITEMS 15-18, QTY'S LISTED)		
5-15	148049	S TIRE 11X4.0-5	1
5-16	148047	S FLANGE BRG 3/4 ID	2
5-17	148048	S RIM ASM 5.0 DIA	1
5-18	148046	S ROLLER BRG 3/4 ID	1
5-19	43119	SPACER	2
5-20	64187-03	WHEEL NUT 1/2-20	8
5-21	186069	S DRIVE WHEEL W/LAB	2
	(INCLUDES ITEMS 22 & 23)		
5-22	188063-1	S RIM	1
5-23	188078-01	S TIRE 20X10.0-10	1
(ORDER IN PAIRS PRIOR TO SERIAL #00354)			
5-24	188058	ASSY-ZERO TURN LH	1
5-25	186064	S LYNX FRAME W/LABS	1
5-26	108063	BEARING	2
5-27	48048A	BEARING-SLEEVE	4

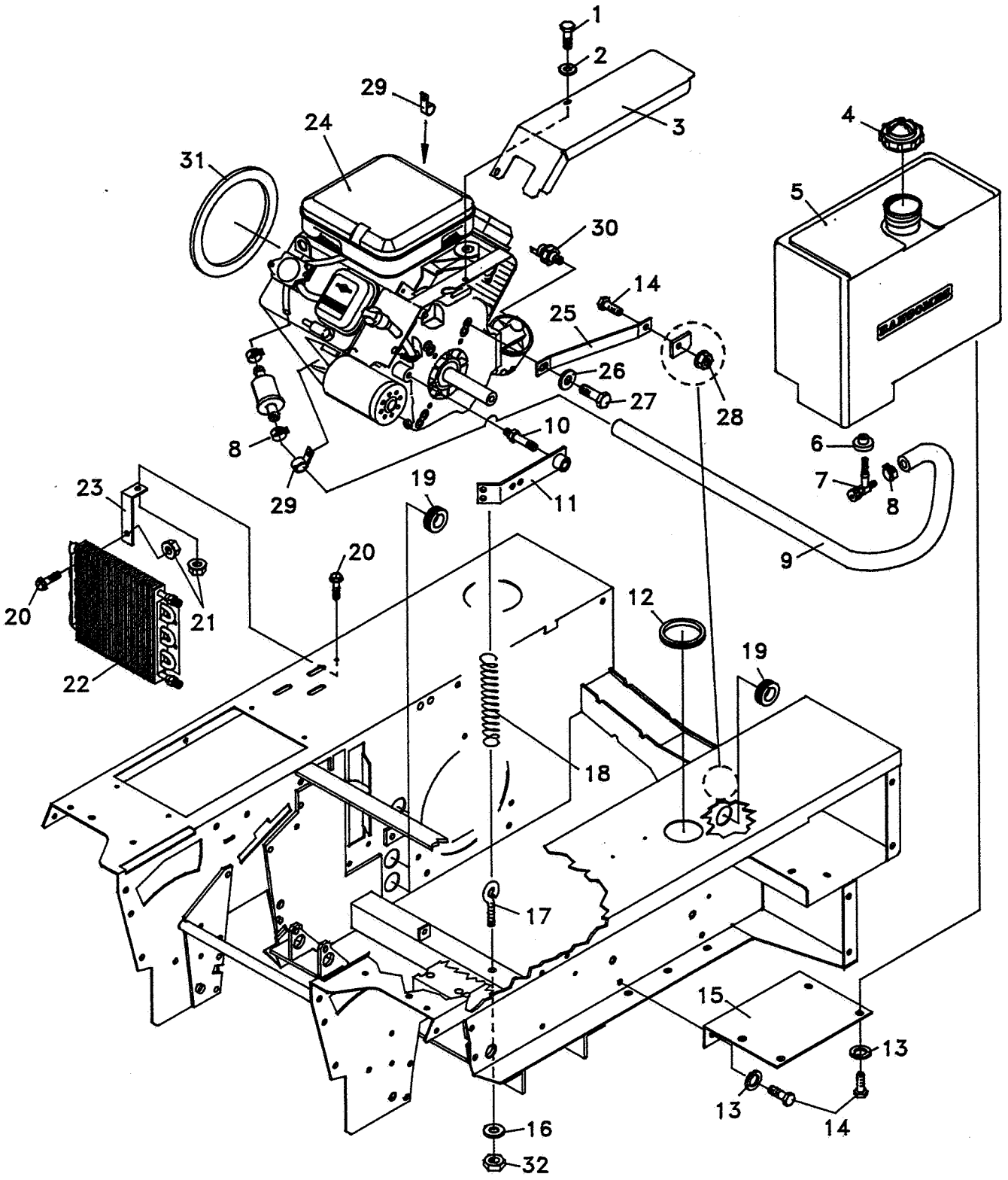
1
2
3
4
5
6
7
8
9
10
11
12
13
14
15
16
17
18
19
20
21
22
23
24
25
26
27
28
29
30
31
32

ITEM	PART No.	DESCRIPTION	QTY
6-1	64205-013	BOLT-METRIC M6-1X12	2
6-2	64163-03	17/64IDX5/8ODX18GA	2
6-3	182182	SHIELD-HEAT B&S V-TW	1
6-4	48587	S CAP, FUEL TANK	1
6-5	188002	FUEL TANK, CLEAR	1
	(INCLUDES ITEMS 4, 6 & 7)		
6-6	48310	S BUSHING,FUEL TANK	1
6-7	48311	S VALVE,FUEL TANK	1
6-8	88042N	HOSE CLAMP	2
6-9	09007-04	S HSE .5 X .25 X 26.25	1
6-10	183027	STUD-IDLER	1
6-11	186030	ENGINE IDLER	1
6-12	148034-03	INSUL.GROMMET 2.5 I.D.	1
6-13	64006-03	LOCKWSHR-HELICAL 3/8	6
6-14	64123-15	BOLT-HEX 3/8-16X3/4	7
6-15	182117	SUPPORT-FUEL TANK	1
6-16	64163-55	WSHR .328X.75X14 GA	1
6-17	64158-03	EYE BOLT	1
6-18	188025	SPRING-NEUTRAL ARM	1
6-19	148034-01	INSUL.GROMMET 1" I.D.	4
6-20	64139-02	BOLT-WLF 1/4-20X1/2	4
6-21	64141-2	NUT-WLF 1/4-20	4
6-22	108207	COOLER OIL	1
6-23	182107	SUPPORT-COOLER	1
6-24 *	108266	ENGINE-B&S V16 HOR	1
6-25	182183	BRACE-ENGINE	1
6-26	64163-43	WSHR.443/.454X1X11GA	1
6-27	64123-38	BOLT-HEX 7/16-14X1	1
6-28	64141-4	NUT-WLF 3/8-16	1
6-29	48228A	CABLE CLIP-INSULATED	2
6-30	108267	OIL PRESSURE SWITCH	1
6-31	48450-07	FOAM	1
6-32	64229-02	LOCKNUT NYLON 1/4-20	1

* RANSOMES DOES NOT SERVICE. SEE BRIGGS & STRATTON DEALER.

CUTTER DECK & GEARBOX(P/N-XDTBS420)

FIGURE 7A

LYNX 2000

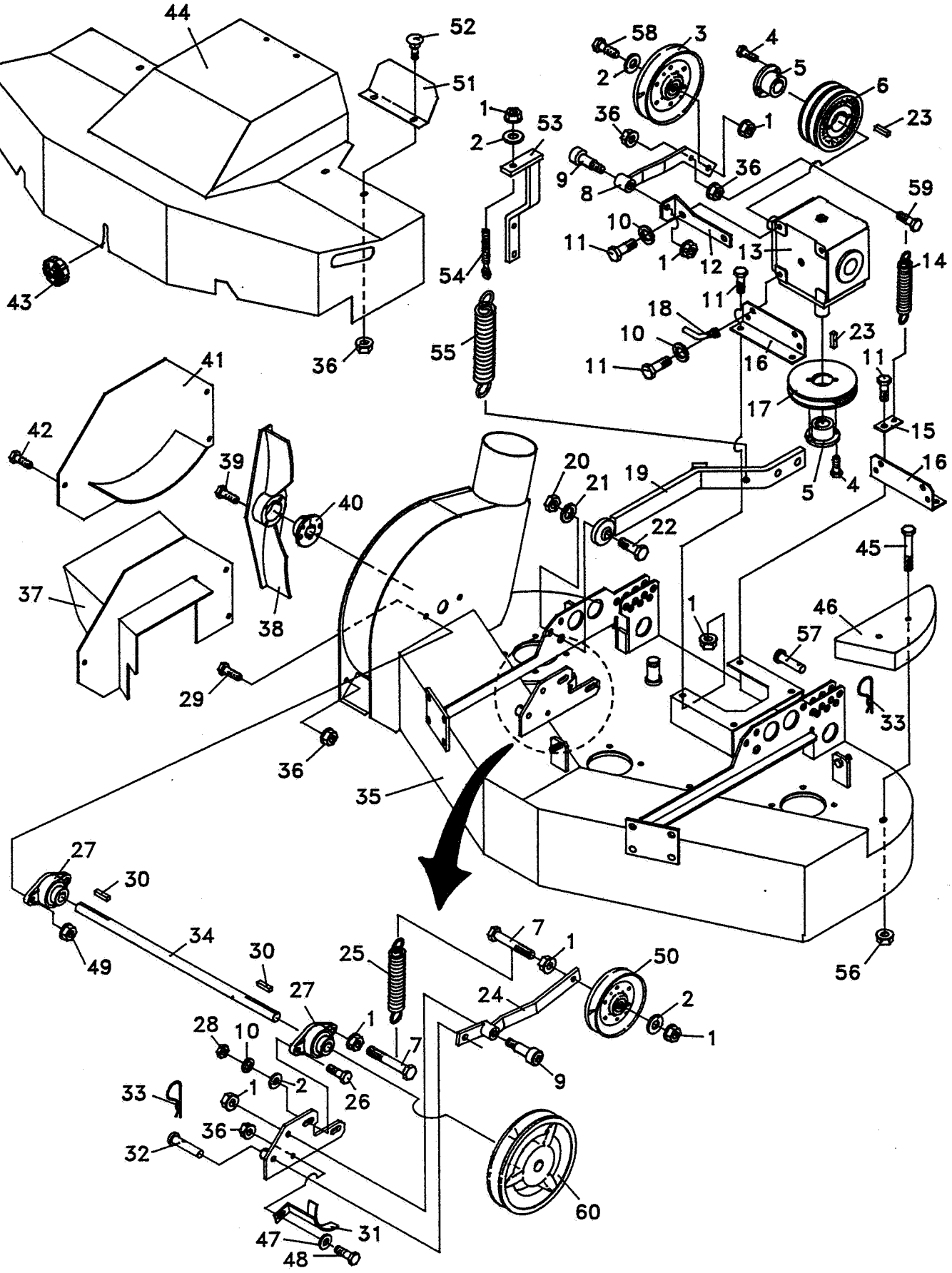

CUTTER DECK & GEARBOX (P/N-XDTBS420)

LYNX 2000

FIGURE 7A

ITEM	PART No.	DESCRIPTION	QTY
7-1	64141-4	NUT-WLF 3/8-16	10
7-2	64163-31	WASH.25/64X1X12 GA	4
7-3	38010-1A	IDLER PULLEY	1
7-4	64123-06	BOLT-HEX 1/4-20X3/4	4
7-5	158085-01	BUSHING-PULLEY 1" ID	2
7-6	181003	PULLEY-DBL GRVE 4.80	1
7-7	64123-159	BOLT-HEX 3/8-16X2-1/2	2
7-8	186010	IDLER ARM	1
7-9	64166-14	BOLT SH 3/8-16X.49X1.25	2
7-10	64006-03	LOCKWSHR-HELICAL 3/8	8
7-11	64123-15	BOLT-HEX 3/8-16X3/4	10
7-12	182035	BRKT-IDLER PIVOT	1
7-13	188006	GEAR BOX 1.5:1 RATIO	1
(SEE FIG 20 PGS 36,37 FOR BREAKDOWN)			
7-14	188025	SPRING-NEUTRAL ARM	1
7-15	182044	PLATE SPRING	1
7-16	182017	BRKT-GEAR BOX	2
7-17	181002	PULLEY-SNGL GRVE 5.00	1
7-18	183009	GUIDE-BELT	1
7-19	186075	LIFT ARM	2
7-20	64025-16	NUT-HEX 5/8-18	2
7-21	64006-04	LOCKWSHR-HELICAL 5/8	2
7-22	64123-137	BOLT-HEX 5/8-18X2	2
7-23	64164-12	1/4X1/4X1 SQ END KEY	2
7-24	186009	IDLER ARM	1
7-25	188011	SPRING-IDLER	1
7-26	64123-70	BOLT-HEX 3/8-16X1-1/2	1
7-27	188013	FLANGE, 2-BOLT	2
7-28	64025-05	NUT-HEX 3/8-16	2
7-29	64123-50	BOLT-HEX 3/8-16X1	2
7-30	64164-02	KEY 3/16X3/16X1 SQ	2
7-31	186012	BELT GUIDE	1
7-32	183008	PIN-CLEVIS, .50X1.50	1
7-33	64168-1	HAIRPIN COTTER	3
7-34	183002	SHAFT	1
7-35	186070	S LYNX 42" DECK W/LABS	1
7-36	64141-6	NUT-WLF 5/16-18	12
7-37	186004	DISCHARGE CHUTE	1
7-38	186008	BLOWER PROP	1
7-39	64123-175	BOLT-HEX 1/4-20X1-5/8	2
7-40	158085-02	BUSHING,PULLEY .75 DIA	1
7-41	186005	BLOWER COVER	1
7-42	64123-128	BOLT-HEX 5/16-18X5/8	3
7-43	148322-01	KNOB-3/8-16	3
7-44	186071	S LYNX 42" B-COV W/LAB	1
7-45	64123-171	BOLT-HEX 3/8-16X3-1/2	2
7-46	188065	BALANCE-DECK 42"	2
7-47	64163-55	WSHR .328X.75X14 GA	1
7-48	64123-68	BOLT-HEX 5/16-18X1	1
7-49	64151-18	3/8-16 CL HEX NUT	2
7-50	188005	IDLER,3.5" FLANGED	1
7-51	182121	STOP-FOOT	2
7-52	64018-9	BOLT-CRG 5/16-18X3/4	4
7-53	186055	SPRING SUPPT RH	1
*	186054	SPRING SUPPT LH	1
7-54	183038	BOLT-EYE 3/8-16	2
7-55	188064	SPRING-EXTENSION 7.50	2
7-56	64141-11	NUT-WLF 3/8-16 CL	2
7-57	64188-30	PIN, CLEVIS	2
7-58	64123-87	BOLT-HEX 3/8-16X1-3/4	1
7-59	64123-47	BOLT-HEX 5/16-18X1-1/4	1
7-60	181009	PULLEY	1

* NOT ILLUSTRATED

CUTTER DECK(P/N-XDTBS420) PULLEYS

RANSOMES

BOB-CAT®

FIGURE 8A

LYNX 2000

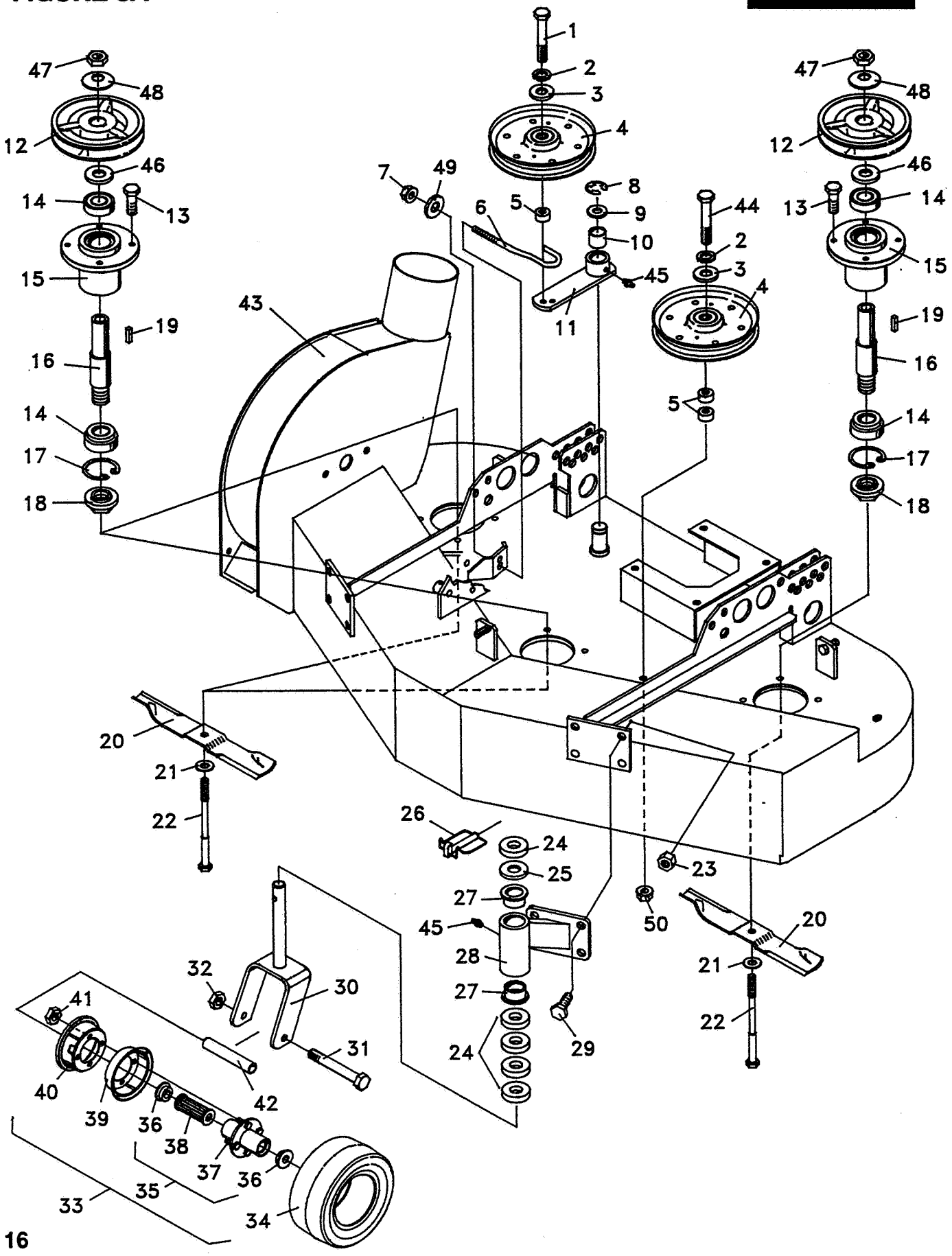

CUTTER DECK(P/N-XDTBS420) PULLEYS

FIGURE 8A

ITEM	PART No.	DESCRIPTION	QTY
8-1	64123-87	BOLT-HEX 3/8-16X1-3/4	1
8-2	64006-03	LOCKWSHR-HELICAL 3/8	2
8-3	64163-31	WASH.25/64X1X12 GA	2
8-4	38297	IDLER, 5"OD FLANGED	2
8-5	33030-7	BUSHING, IDLER	3
8-6	183001	IDLER PULL ROD	1
8-7	64229-02	LOCK NUT-NYLON 5/16-18	1
8-8	64221-04	E-RING .875	1
8-9	64163-65	WSHR .890X1.375X18GA	1
8-10	65103A	BEARING BUSHING	1
8-11	36284	ASM IDLER ARM	1
	(INCLUDES ITEMS 10 & 45)		
8-12	31026	PULLEY 4.8X1.00	3
8-13	64197-005	BOLT TR 3/8-16X1-1/4	12
8-14	38348-01	BEARING-SPNDL SEAL	6
8-15	31028-01	SPINDLE HOUSING	3
8-16	33179-02	SPINDLE	3
8-17	64144-38	SNAP RING	3
8-18	38315	NUT-SPINDLE	3
8-19	64164-12	1/4X1/4X1 SQ END KEY	3
8-20	182002-01	S BLADE-CUTTER	3
8-21	64163-01	5/8IDX1-1/2ODX3/32THK	3
8-22	33049-03	BOLT-BLADE	3
8-23	64151-11	7/16-14 HEX LOCKNUT	8
8-24	64163-22	1-1/32X1-3/4X1/2 WASHR	10
8-25	64163-07	1-1/32X1-3/4X1/4 WASH	2
8-26	64173-04	QUICK PIN	2
8-27	48053-2A	BEARING, FLANGED	2
8-28	186007	CASTER SUPPORT	2
	(INCLUDES ITEMS 27 & 45)		
8-29	64123-38	BOLT-HEX 7/16-14X1	8
8-30	36526	S CASTER YOKE W/LAB	2
8-31	64123-166	BOLT-HEX 1/2-13X5-1/2	2
8-32	64151-7	1/2-13 HEX LOCK NUT	2
8-33	38264	WHEEL ASSY 9X3.5-4.00	2
	(INCLUDES ITEMS 34-41, QTY'S LISTED)		
8-34	118123	S TIRE&TUBE 9X3.5 - 4	1
	118124	S TUBE 9 X 3.50 - 4	1
8-35	38268	S S.HUB ASSY	1
	(INCLUDES ITEMS 36-38)		
8-36	38274	S BEARING RETAINER	2
8-37	64123-15	BOLT-HEX 3/8-16X3/4	4
8-38	38273	S ROLLER BEARING	1
8-39	112421	S WHEEL HALF	1
8-40	112422	S WHEEL HLF, VALVE	1
8-41	64151-18	3/8-16 CL HEX NUT	4
8-42	43180	BUSHING, SPANNER	2
8-43	186070	S LYNX 42" DECK W/LABS	1
8-44	64123-159	BOLT-HEX 3/8-16X2-1/2	1
8-45	85010N	ZERK GREASE FITTING	3
8-46	62464-7A	WASHER,THRST 1.0X1.56	3

ITEM	PART No.	DESCRIPTION	QTY
8-47	64025-16	NUT-HEX 5/8-18	3
8-48	64209-03	SPRING WASHER .67 ID	3
8-49	64163-55	WSHR .328X.75X14 GA	1
8-50	64141-4	NUT-WLF 3/8-16	1

186006 - SPINDLE ASSEMBLY, INCLUDES ITEMS 14-18

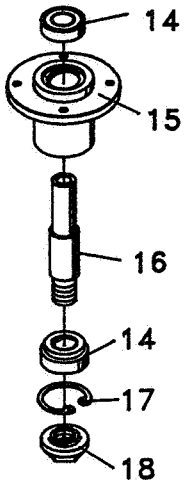

GRASS BOX(P/N-XGDXS120)

RANSOMES

BOB-CAT©

FIGURE 9A

LYNX 2000

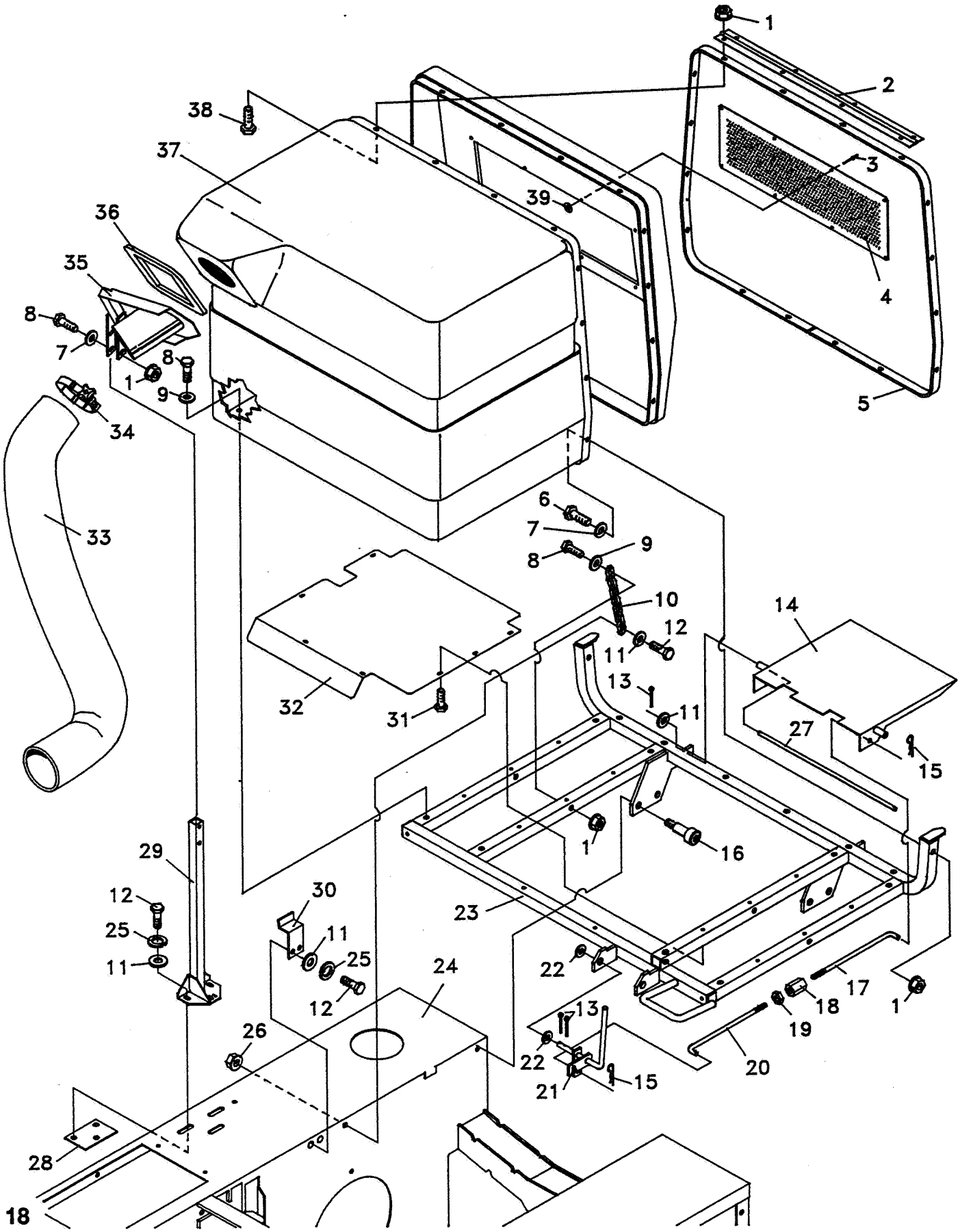

GRASS BOX(XGDXS120)

FIGURE 9A

ITEM	PART No.	DESCRIPTION	QTY
9-1	64141-9	NUT-WLF 5/16-18 CL	39
9-2	188021	HINGE-GRASS BOX	1
9-3	64215-06	RIVET-POP IFI# 48	8
9-4	182001	SCREEN GRASS BOX	1
9-5	182032	BAND-GRASS BOX	2
9-6	64123-56	BOLT-HEX 5/16-18X2	6
9-7	64163-55	WSHR .328X.75X14 GA	8
9-8	64123-61	BOLT-HEX 5/16-18X1-3/4	7
9-9	64163-29	21/64X1X11GA.WASHER	5
9-10	158001-03	CHAIN, 12.74 LONG	1
9-11	64163-31	WASH.25/64X1X12 GA	10
9-12	64123-50	BOLT-HEX 3/8-16X1	8
9-13	64140-1	COTTER PIN-1/8X1	4
9-14	186021	GBOX DOOR PLATE	1
9-15	64168-2	HAIRPIN COTTER	2
9-16	64166-11	SHOULDER BOLT	2
9-17	183013-01	ROD-LH TURNBUCKLE	1
9-18	33150	BODY, TURNBUCKLE 7/16	1
9-19	64001-10	NUT-HEX JAM 7/16-20	1
9-20	183013-02	ROD-RH TURNBUCKLE	1
9-21	186017	GBOX DUMP ROD	1
9-22	64163-19	33/64X1-1/4X12GA WASH	2
9-23	186015	FRAME, GRASS BOX	1
9-24	186064	S LYNX FRAME W/LABS	1
9-25	64006-03	LOCKWSHR-HELICAL 3/8	7
9-26	64141-11	NUT-WLF 3/8-16 CL	1
9-27	183036	ROD-PIVOT	1
9-28	186037	SUPPORT PLATE	1
9-29	186061	TUBE SUPPORT	1
9-30	182052	BRKT-GRASS BOX	2
9-31	64152-23	1/4-20X3/8 LG SP SCREW	6
9-32	182123	DEFLECTOR-HEAT	1
9-33	188004-1	HOSE	1
9-34	188053	CLAMP-BLOWER TUBE	2
9-35	186063	GBOX INLET TUBE	1
9-36	188028	FOAM-GBOX INTAKE	1
9-37	188001	GRASS BOX & DOOR	1
9-38	64152-44	5/16-18X3/4 HEX HD SCR	26
9-39	64211-01	WSHR-ALUM,BACKING	8

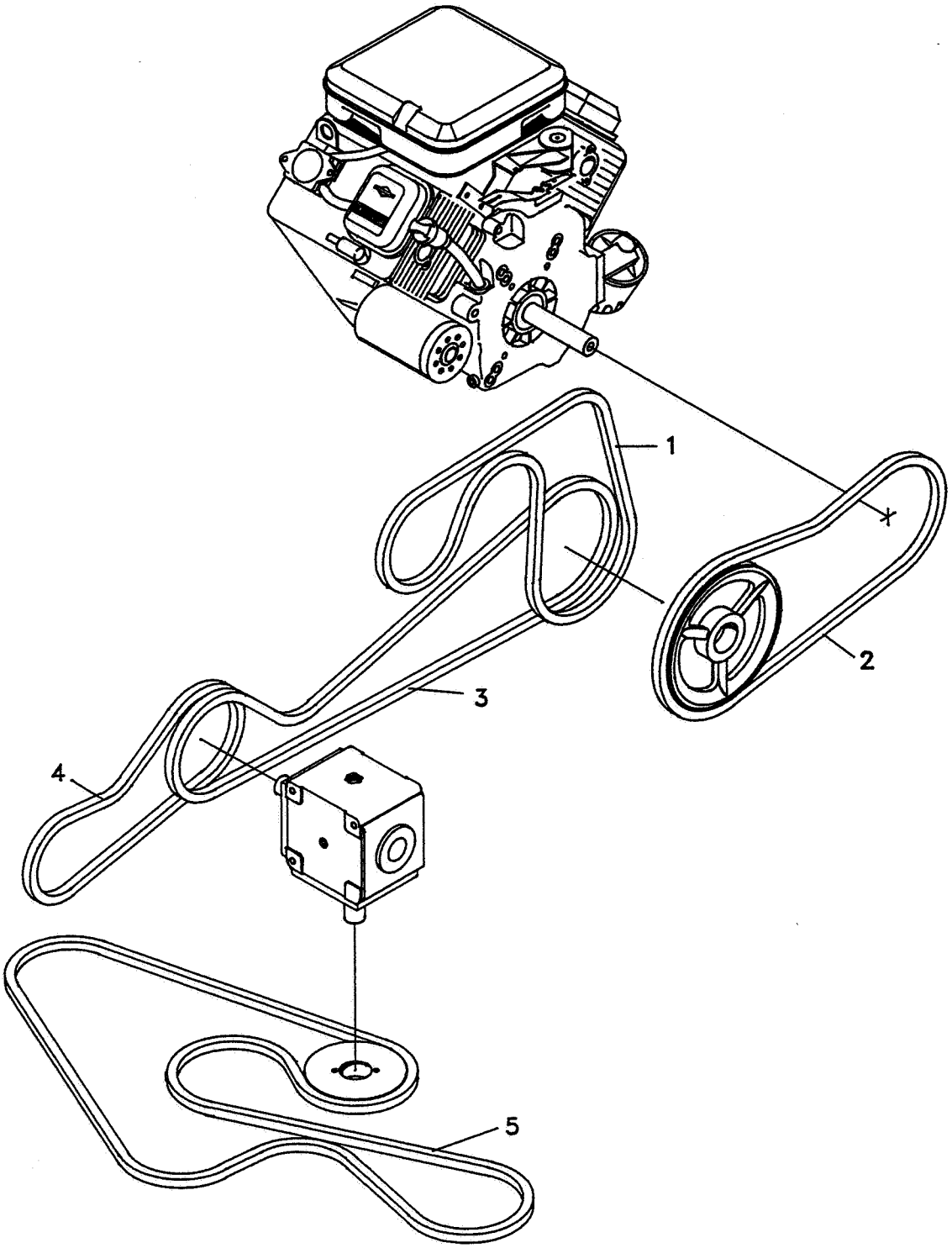
1
2
3
4
5

BELTS

FIGURE 10A

ITEM	PART No.	DESCRIPTION	QTY
10-1	188030	BELT-PUMP	1
10-2	188035	BELT-ENGINE	1
10-3	188069	BELT, PTO CL-42"	1
10-4	188010	BELT-BLOWER	1
10-5	38331	BELT-DECK DRIVE	1

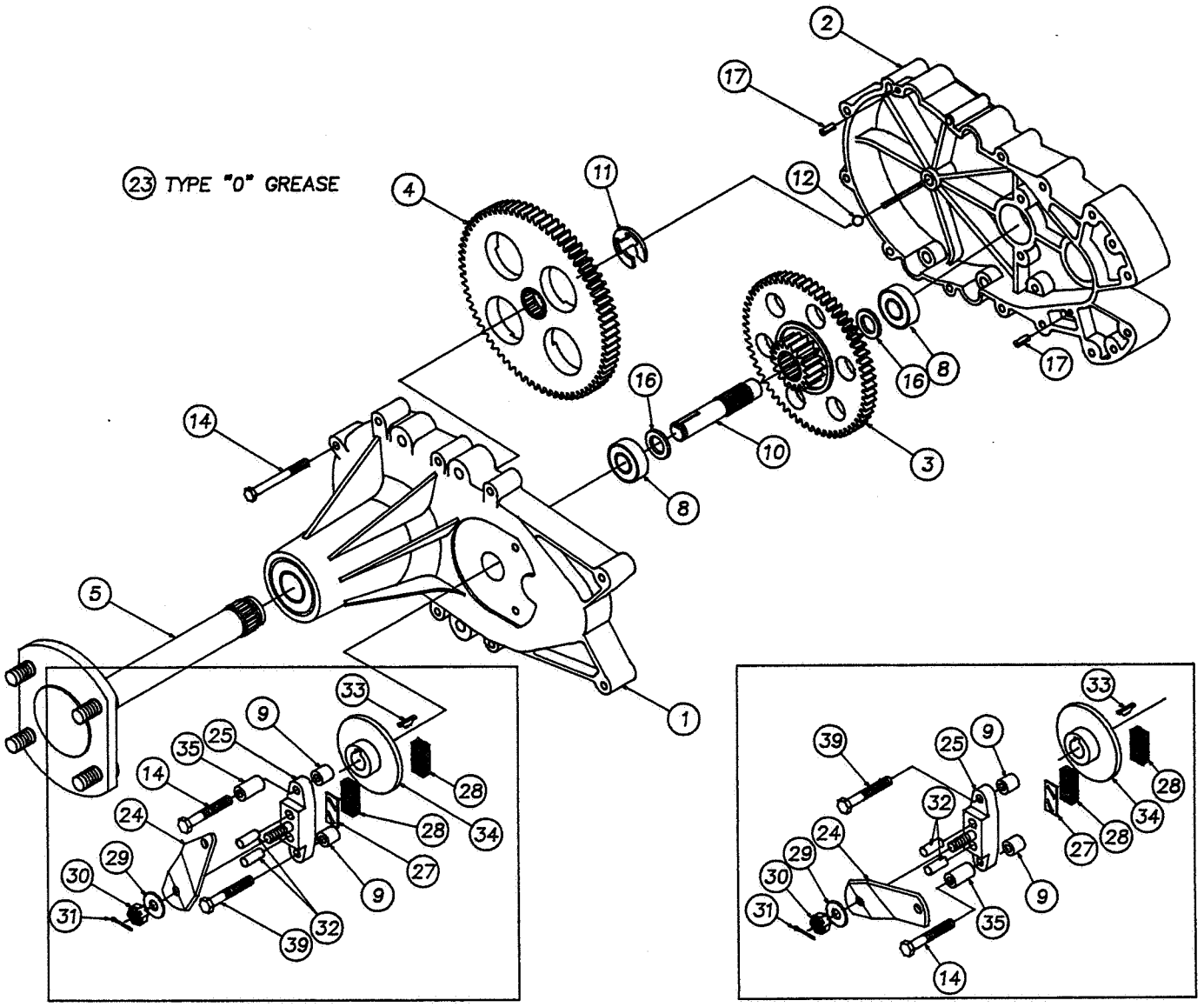

188057-2 LH BRAKE ASSY

188058-1 RH BRAKE ASSY

HYDRO GEAR ZTR ASSEMBLY

FIGURE 11A

HYDRO GEAR MODEL, P/N-210-2500

PARTS SERVICED BY RANSOMES:

ITEM	PART No.	DESCRIPTION	QTY
11-1	188057-5	S AXLE CAR HSG 62768	1
11-2	188057-6	S HYD MNT HSG 44350	1
11-3	188057-7	S REDUCE GEAR 44352	1
11-4	188057-8	S DRIVE GEAR 44358	1
11-5	188057-9	S ASSY, AXLE 62681	1
11-8	188057-10	S BALL BRG 44147	2
11-10	188057-11	S BRAKE SHAFT 44351	1
11-12	188057-12	S BALL 44361	
11-28	188057-1	S PUCK, BRAKE 44132	2
11-33	188057-4	S KEY 3/16 X 5/8 44143	1
11-34	188057-3	S BRAKE DISC 44090	1

188057-2 BRAKE ASSY LH INCLUDES ITEMS 8,9,14,24,25,27-35,39

188058-1 BRAKE ASSY RH INCLUDES ITEMS 8,9,14,24,25,27-35,39

ITEM	PART No.	DESCRIPTION	QTY
11-9	23770	SPACER, BRAKE	2
11-11	44359	E-RING	1
11-14	44366	BOLT, 1/4-20 X 2-1/2"	9
11-16	44371	WASHER	2
11-17	44269	PIN, SPRING	2
11-18	32749	MOUNTING SPACER	3
11-19	44355	BEARING SPACER	1
11-20	44232	BALL BEARING	1
11-21	44354	RETAINING RING	1
11-22	44353	11 TOOTH INPUT GEAR	1
11-23	44835	TYPE "O" GREASE	2
11-24	44094	ARM,BRAKE ACTUATOR(LH)	1
	44613	ARM,BRAKE ACTUATOR(RH)	1
11-25	62589	YOKE, BRAKE	1
11-27	44134	PLATE, PUCK	1
11-29	44130	WASHER	1
11-30	44142	NUT, CASTLE	1
11-31	44101	PIN, COTTER 3/32 X 3/4	1
11-32	44127	PIN, BRAKE ACTUATING	2
11-35	23711	SPACER, TORSION SPRING	1
11-39	44276	BOLT	1

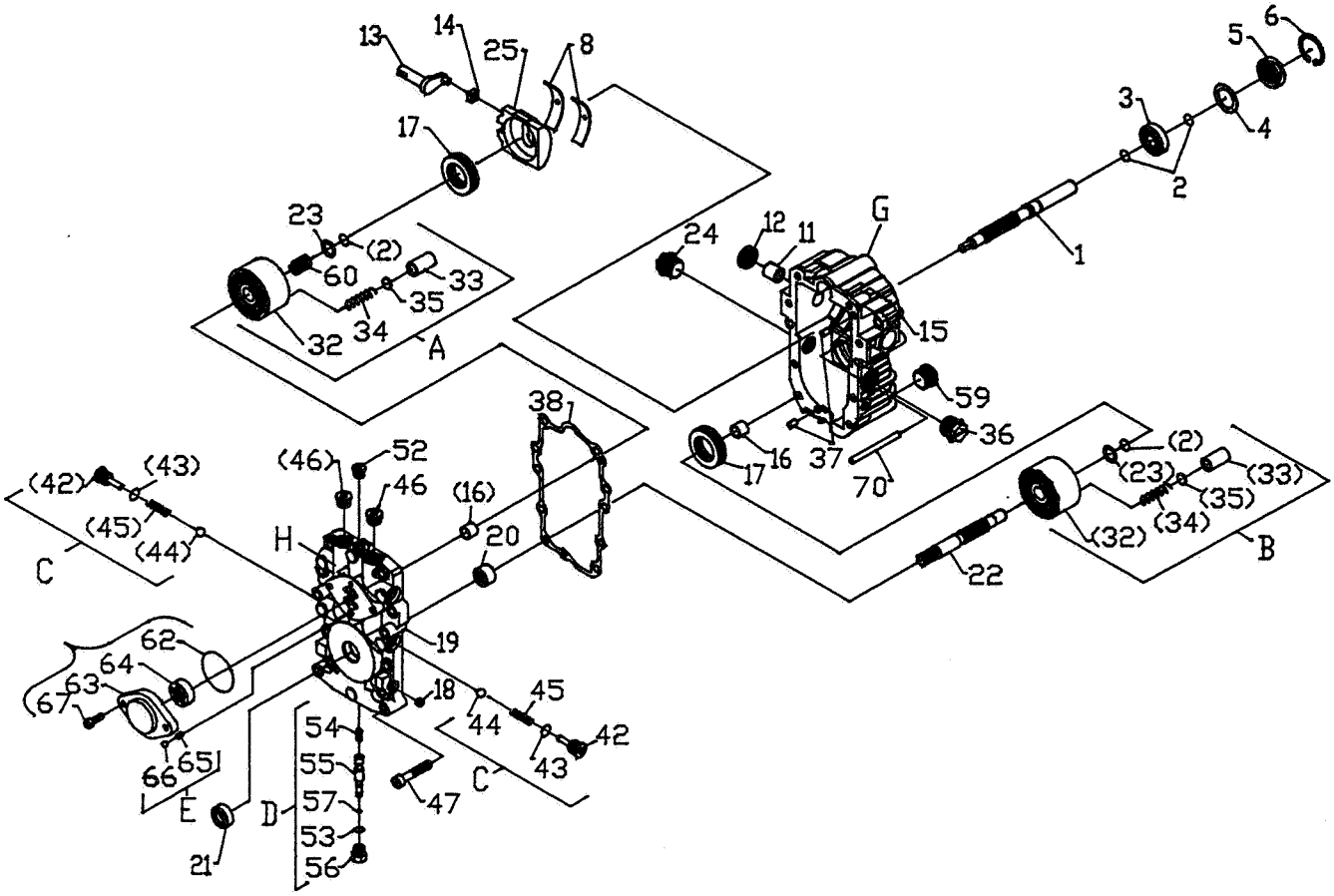
13
14
25
8
17
23
(2)
60
33
35
34
32
A
24
12
11
G
15
59
36
17
16
37
70
38
(46)
52
46
(16)
20
H
(42)
(43)
(45)
(44)
C
62
64
63
67
66
65
E
D
54
55
57
53
56
21
19
18
45
44
42
43
47
C
1
2
3
4
5
6
(2)
(23)
(33)
(35)
(34)
(32)
22
B

HYDRO GEAR TRANSMISSION

FIGURE 12A

HYDRO-GEAR TRANSMISSION BDV 10L 111

THE FOLLOWING ARE PARTS SERVICED BY RANSOMES:

ITEM	PART No.	DESCRIPTION	QTY
A	38345-12	S-SUN 9007314 CYL KIT	1
B	38345-12	S-SUN 9007314 CYL KIT (USE WITHOUT ITEM 60)	1
C	38345-02	S-SUN 2510008 VALVE KT	2
D	188059-7	S-KIT VALVE 2513011	1
E	38345-05	S-SUN 2510011CRLF-KIT	1
1	38345-09	SHAFT 1030673	1
8	188059-13	S BRG CRDL J1040976	2
11	188059-14	S BRG TRUNN 2003009	1
13	188059-15	S ARM TRUNN 2003005	1
14	188059-9	S GUIDE-SLOT 2000015	1
15	188059-10	S HSG-TRANS 2003053	1
22	188059-6	S SHAFT 31020594	1
25	188059-11	S SWPLT-VAR 2003087	1
47	188059-12	S SCREW 9007614-0808	8
62	38345-08	S SUN 9004101-1340 KIT	1
63	38345-06	S SUN 2003040 CRG.KIT	1
64	38345-07	S SUN J1041008	1
67	38345-10	S SUN 9007375-0038 SHS	2

KIT **188059-8** INCLUDES ITEMS 2, 4-6, 12, 21, 30, 38, 43, 53, 57, & 62.

ITEM	PART No.	DESCRIPTION	QTY
12-2	2003016	RING-WIRE RETAINING	4
12-3	2003043	BEARING-SHAFT BALL	1
12-4	2003018	SPACER	1
12-5	9008000-0128	SEAL-LIP	1
12-6	2003052	RING-RETAINING, 100 PC	1
12-12	9008000-0126	SEAL-LIP	1
12-16	2003071	BEARING-SHAFT JOUR.	2
12-17	2003044	BEARING ASSY	2
12-18	9005001-0600	PLUG PIPE	1
12-19	2003055	CENTER SECTION	1
12-20	2003045	BEARING-SHAFT NEEDLE	1
12-21	9008000-0127	SEAL-LIP	1
12-23	2003017	WASHER-BLOCK THRST	2
12-32	2003041	BLOCK-CYLINDER	2
12-33	2003096	PISTON	10
12-34	2003015	SPRING-PISTON	10
12-35	2003019	WASHER-PISTON THRST	10
12-36	9005200-8700	PLUG PLASTIC	1
12-37	9004800-2506	PIN ST HDLS	2
12-38	2003060	GASKET-CENTER SECT.	1
12-42	2000020	PLUG-CHECK	2
12-43	9004201-3700	O-RING	2
12-44	9001214-3700	BALL	2
12-45	2000028	SPRING-CHECK	2
12-46	9005110-5600	PLUG ST THD	2
12-47	9007614-0808	SCREW-SOC HD CAP	8
12-52	9005110-4400	PLUG ST THD	1
12-53	9004201-2500	O-RING	1
12-54	2003011	SPRING-BYPASS	1
12-55	2003002	SPOOL-BYPASS	1
12-56	2000018	PLUG-BYPASS	1
12-57	9004175	O-RING	1
12-59	9005110-8700	PLUG ST THD	1
12-60	2003014	SPRING-BLOCK	1
12-65	2000029	SPRING-CHARGE RELI	1
12-66	9001214-2500	BALL	1

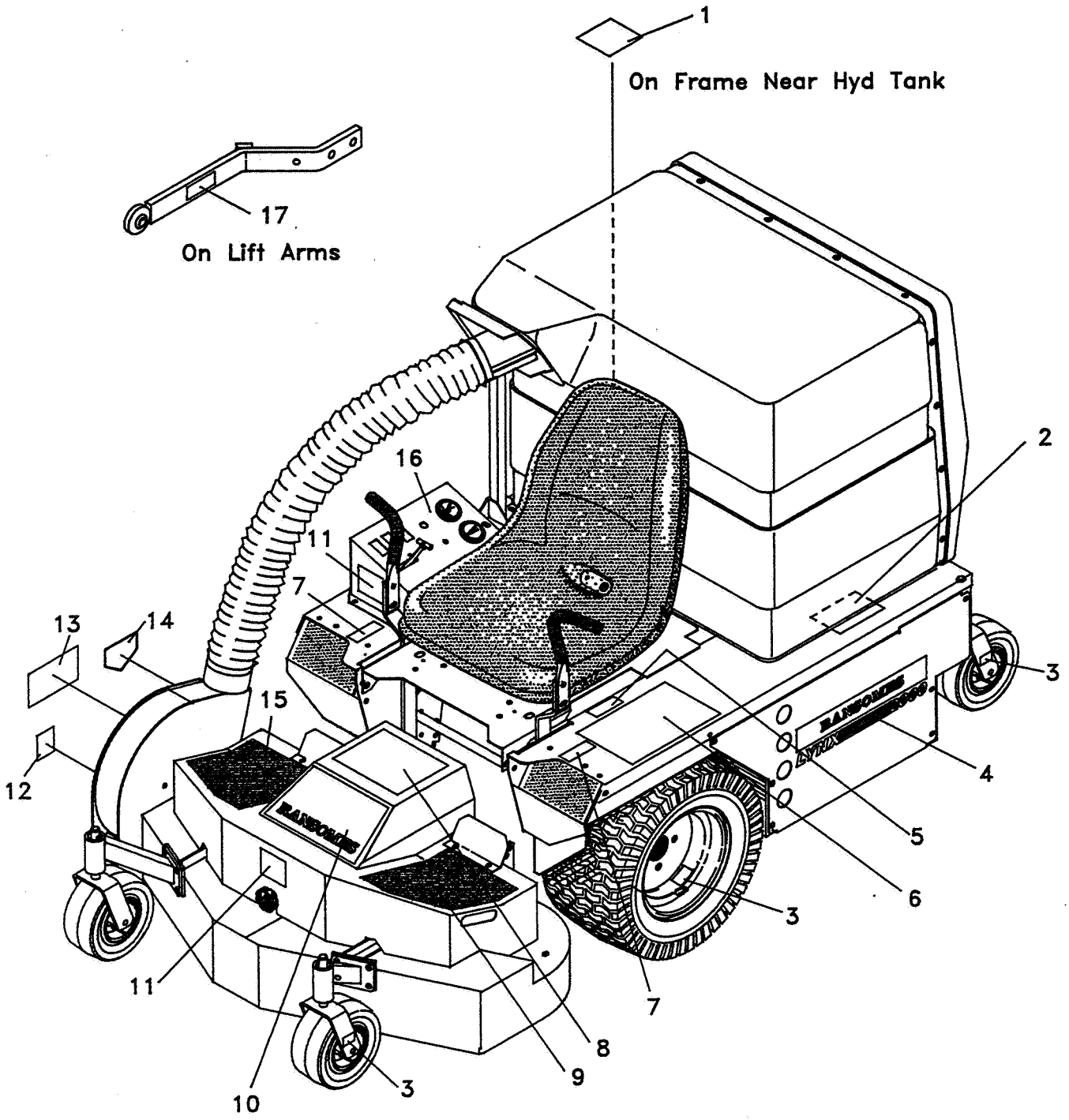
1
On Frame Near Hyd Tank
17
On Lift Arms
2
16
11
7
13
14
15
12
3
4
5
6
3
7
11
8
9
10
3

ITEM	PART No.	DESCRIPTION	QTY
13-1	00228	DECAL-HYD RESERVOIR	1
13-2	00444	LABEL,FUEL-LYNX	1
13-3	00253	DECAL TIRE PRESSURE	6
13-4	00455	LABEL-LYNX 2000	2
13-5	00446	LABEL,PARK/DRIVE-LYNX	1
13-6	00442	LABEL,MAINWARN-LYNX	1
13-7	00445	LABEL,FWD/REV-LYNX	2
13-8	00470	LABEL-HEIGHT OF CUT	1
13-9	188012-01	PAD-NON SLIP, LH	1
13-10	00456	LABEL-TOWER	1
13-11	00437	LABEL,MADE IN AMERICA	2
13-12	00286	DECAL-WARNING	1
13-13	00443	LABEL,DISCHARGE-LYNX	1
13-14	75075A	DECAL,CPSC "DANGER"	1
13-15	188012-02	PAD-NON SLIP, RH	1
13-16	00461	LABEL,CNTRL PAN-LYNX	1
13-17	00500	LABEL, SPRING WARN	2

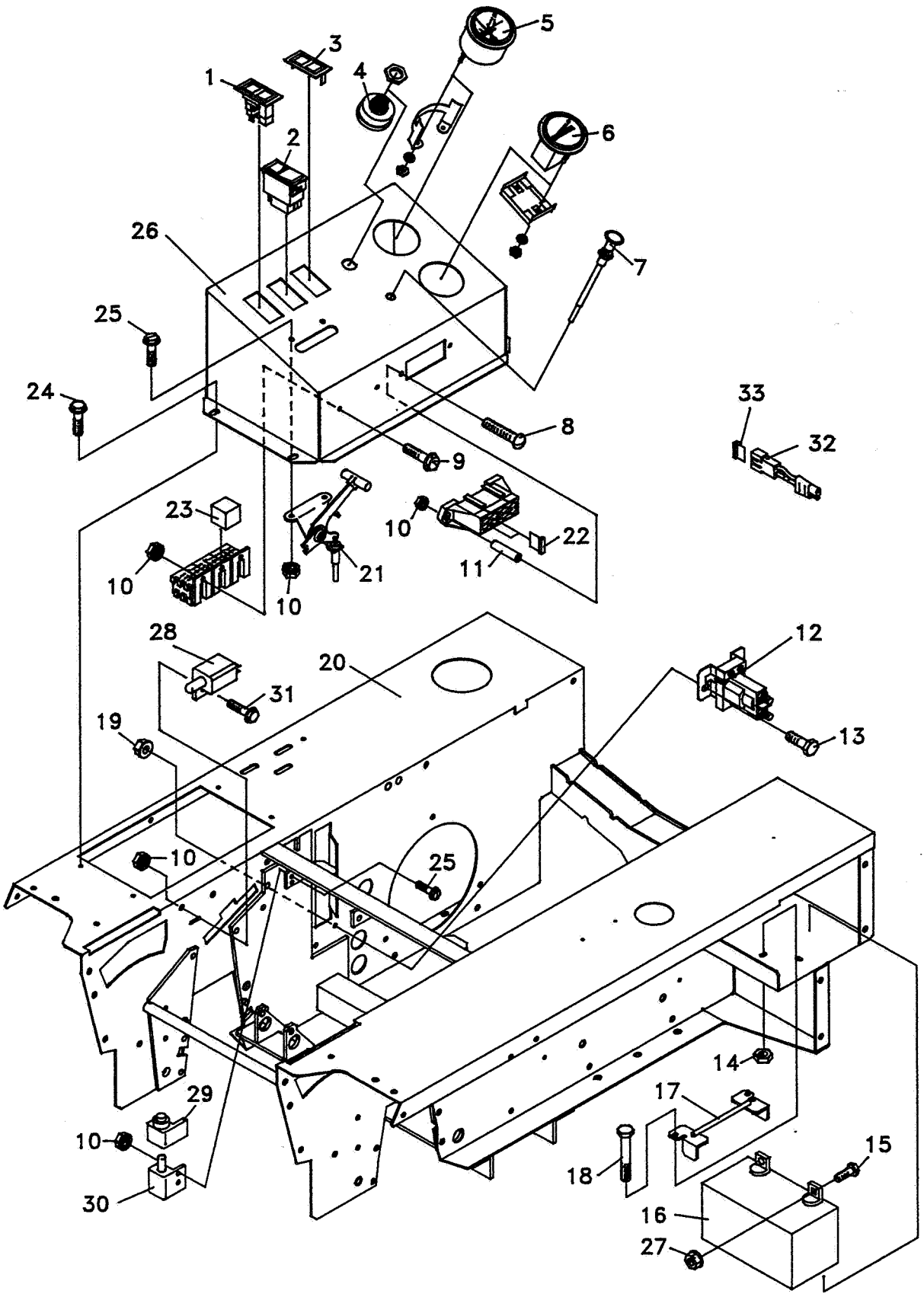
1
2
3
4
5
6
7
8
9
10
11
12
13
14
15
16
17
18
19
20
21
22
23
24
25
26
27
28
29
30
31
32
33

ITEM	PART No.	DESCRIPTION	QTY
14-1	188014	PILOT LAMP	1
	(USE LENS 188015)		
14-2	188068	SWTCH-PTOSWF-511.113	1
	(USE LENS 178092-21)		
	(MACHINES PRIOR TO SERIAL # 00283 USE SWITCH 178092-20)		
14-3	178092-13	S-SINGLE SWITCH BLANK	1
14-4	128010	KEY SWITCH	1
14-5	48400	AMMETER-30 AMP	1
14-6	48030N	HOUR METER ASSEMBLY	1
14-7	108009-03	CONTROL-CHOKE	1
14-8	64152-39	10-24 X 2.25 SCREW	2
14-9	64152-47	SCR-SLT HH 10-24X3/8	2
14-10	64025-15	NUT-HEX #10-24 KEPS	10
14-11	173026	SPACER-FUSE BLOCK	2
14-12	38665	SOLENOID	1
14-13	64139-02	BOLT-WLF 1/4-20X1/2	2
14-14	64229-01	LOCK NUT-NYLON 1/4-20	2
14-15	64123-54	BOLT-HEX 5/16-18X3/4	2
14-16	108055	BATTERY	1
14-17	186034	BATTERY CLAMP	1
14-18	64123-193	BOLT-HEX 1/4-20 X 7"	2
14-19	64141-2	NUT-WLF 1/4-20	2
14-20	186064	S LYNX FRAME W/LABS	1
14-21	158094-03	CTRL-THROTTLE 56.13"	1
14-22	148082-20	FUSE 20 AMP	2
14-23	128037	RELAY	3
14-24	64152-23	1/4-20X3/8 LG SP SCREW	4
14-25	64152-46	SCR-SLT HH 10-24X1/2	4
14-26	186076	CONTROL PANEL W/LAB	1
14-27	64141-6	NUT-WLF 5/16-18	2
14-28	38383	SWITCH-N.C.	1
14-29	38384	BOOT-SWITCH	1
14-30	38382	SWITCH-N.O.	1
14-31	64152-49	SCR-SLT HH 10-24X3/4	2
14-32	178150	DIODE	1
14-33	148082-05	FUSE- 5 AMP	1

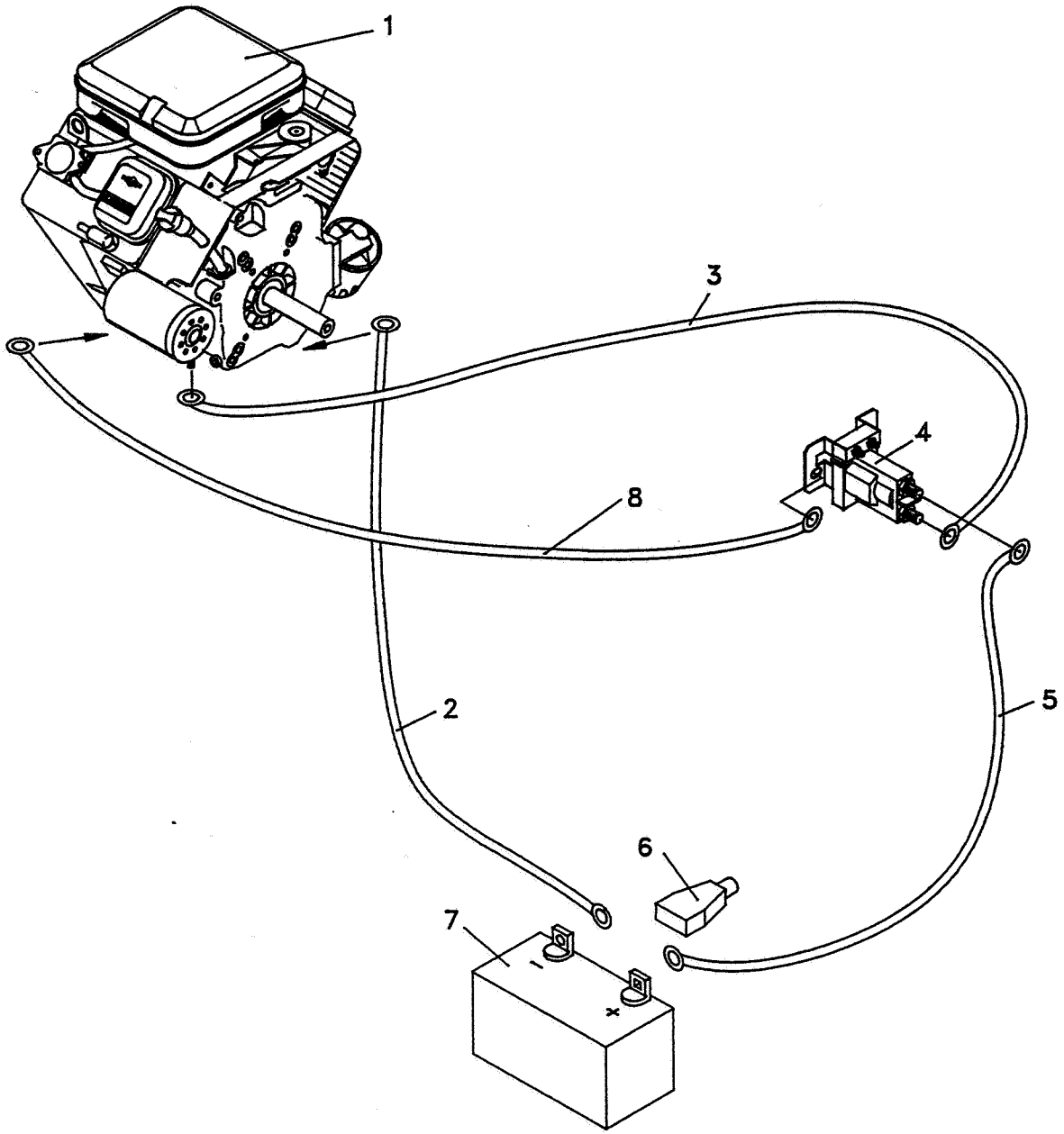
1
3
4
8
2
5
6
7

ELECTRICAL CABLES

FIGURE 15A

ITEM	PART No.	DESCRIPTION	QTY
15-1 *	108266	ENG-B&S 16HP HOR	1
15-2	108061-03	CABLE ASSY 26 GROUND	1
15-3	108061-02	CABLE ASSY,POSITIVE	1
15-4	38665	SOLENOID	1
15-5	108061-10	CABLE-BATT. 49" LONG	1
15-6	48037A	BOOT, BATTERY TERM.	1
15-7	108055	BATTERY	1
15-8	108061-01	CABLE ASSY,BAT-GRD	1

* RANSOMES DOES NOT SERVICE.
SEE BRIGGS & STRATTON DEALER.

LOWER WIRE HARNESS(P/N-188023)

FIGURE 16A

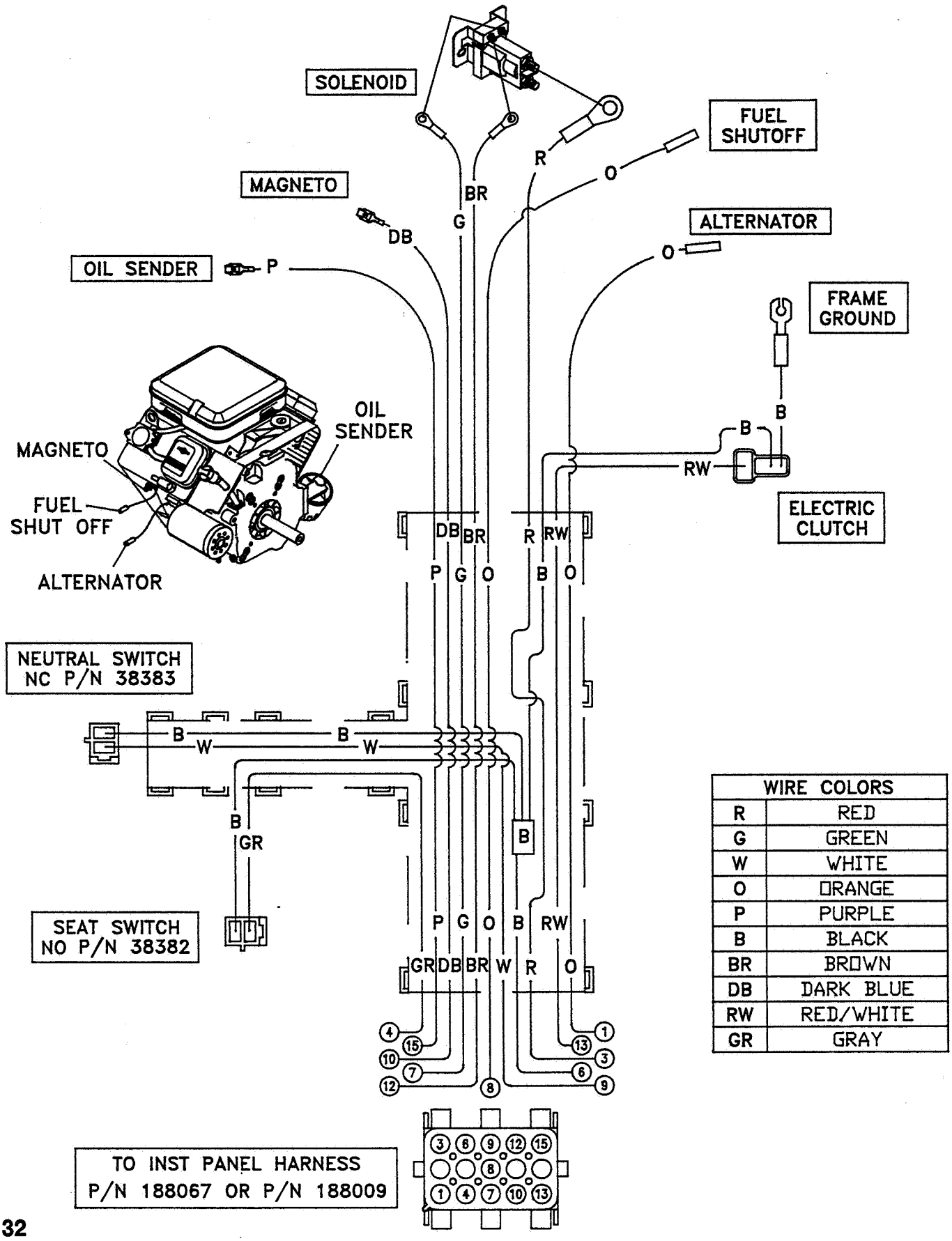

WIRE COLORS	
R	RED
G	GREEN
W	WHITE
O	ORANGE
P	PURPLE
B	BLACK
BR	BROWN
DB	DARK BLUE
RW	RED/WHITE
GR	GRAY

UPPER WIRE HARNESS(P/N-188009)
(USED PRIOR TO SERIAL #00283)

FIGURE 17A

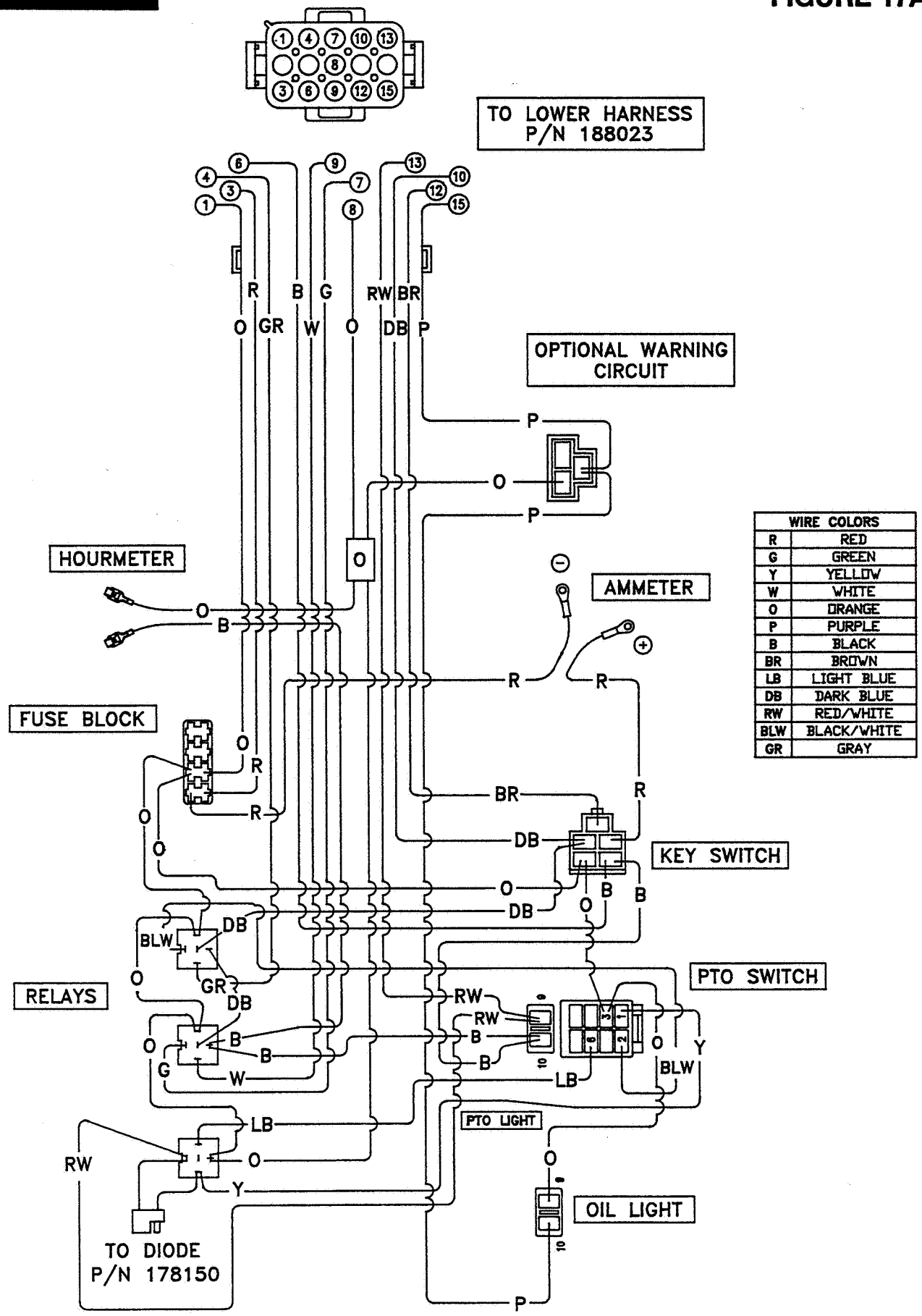

UPPER WIRE HARNESS(P/N-188067)
(USED AFTER SERIAL #00282)

RANSOMES
BOB-CAT®

FIGURE 18A

LYNX 2000

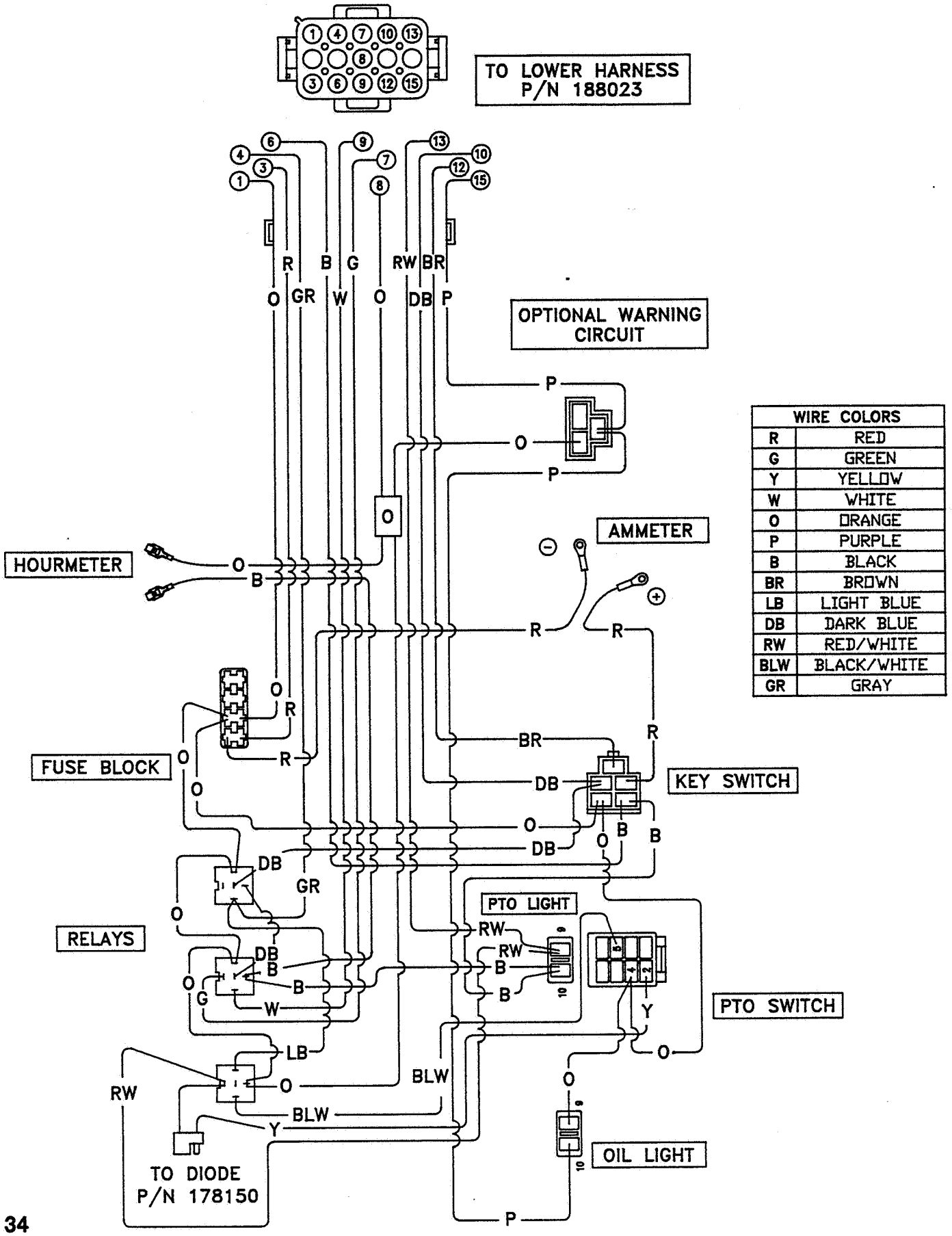

OPTIONAL GRASS BASKETS(P/N-186056)

FIGURE 19A

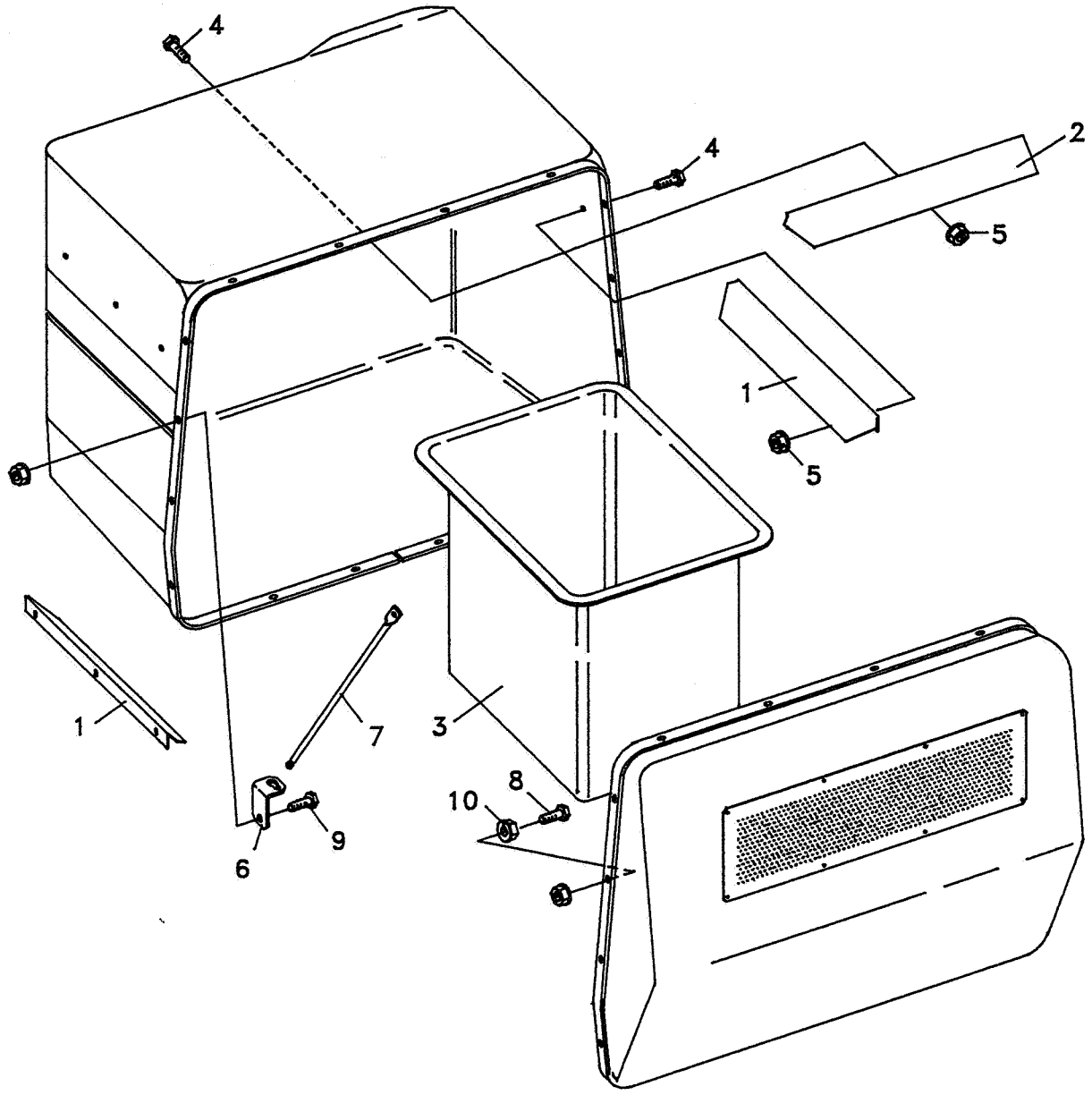

PARTS LIST

ITEM	PART NO.	DESCRIPTION	QTY
1	182179	SLIDE, SIDE	2
2	182180	SLIDE, CENTER	1
3	188003	BASKET	2
4	64139-17	BOLT 1/4-20 X 5/8	9
5	64141-2	NUT WLF 1/4-20	9
6	182206	BRACKET-DOOR SUPPORT	1
7	183039	ROD-DOOR SUPPORT	1
8	64123-69	BOLT 5/16-18 X 1-1/2"	1
9	64123-68	BOLT 5/16-18 X 1"	1
10	64141-9	NUT 5/16-18 FLANGED	1

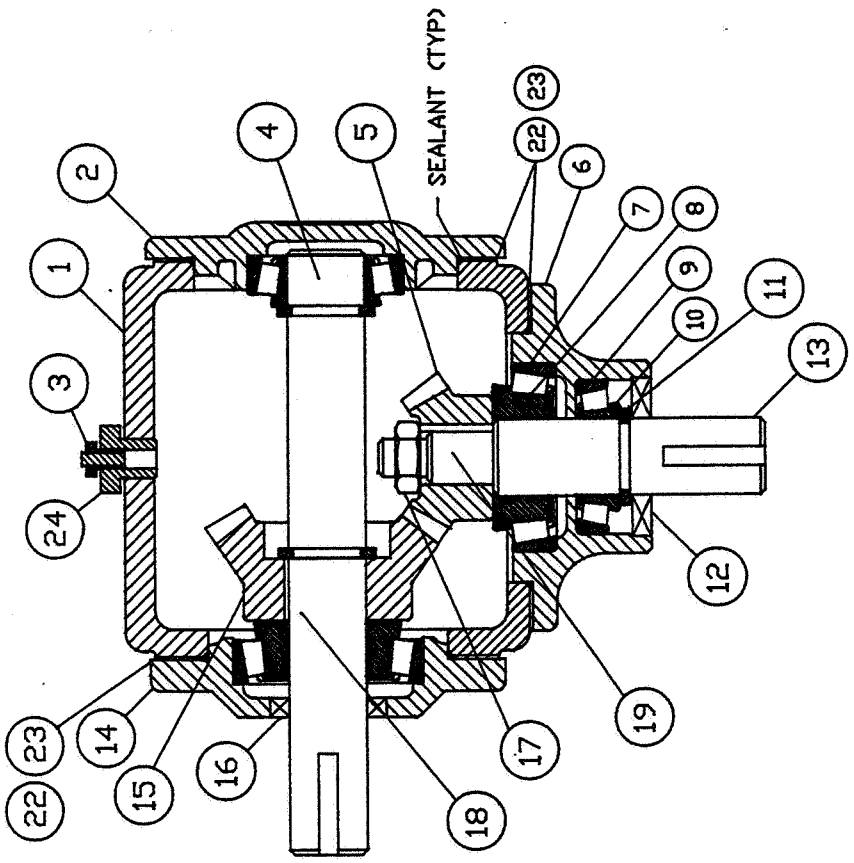
SEALANT (TYP)
1
2
3
4
5
6
7
8
9
10
11
12
13
14
15
16
17
18
19
22
23
24

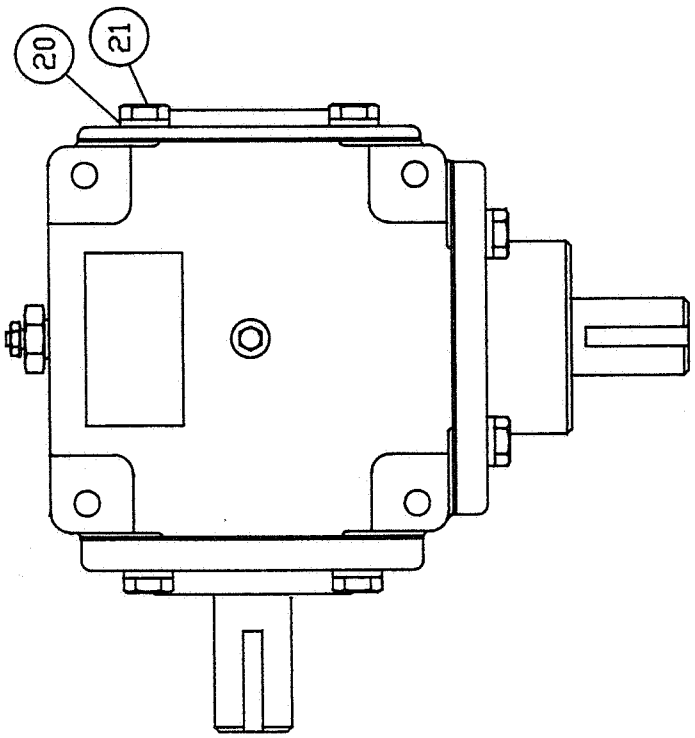
20
21

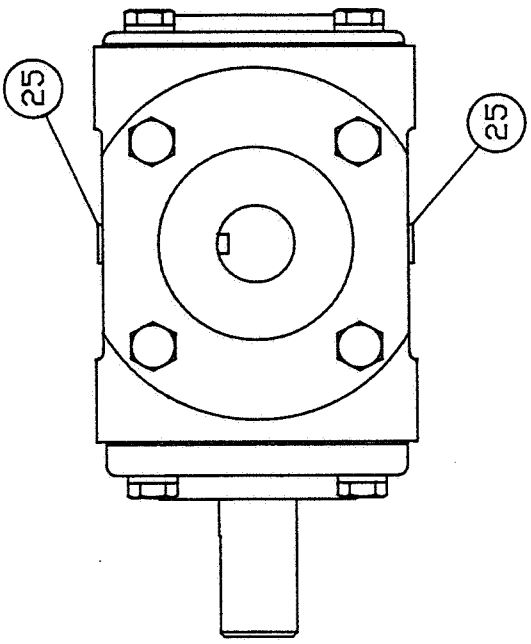
25
25

VON RUDEN GEAR BOX MODEL #33-13-002

FIGURE 20A

ITEM	PART No.	DESCRIPTION	QTY
	188006 GEAR BOX ASSEMBLY		
1	48598-01	S CASE	1
2	188006-01	S END PLATE	1
3	48598-03	S BREATHER	1
4	188006-02	S CROSS SHAFT	1
5	48598-05	S GEAR LH	1
6	48598-06	S PINION HOUSING	1
7	48043-08C	S BEARING CUP	2
8	48043-09C	S BEARING CONE	2
9	48043-03C	S BEARING CUP	2
10	48043-04C	S BEARING CONE	2
11	48043-07C	S RETAINING RING	3
12	48043-06C	S SEAL	1
13	188006-03	S PINION SHAFT	1
14	48598-08	S END CAP	1
15	48598-09	S GEAR RH	1
16	48598-10	S SEAL	1
17	48598-11	S NUT 1/2-20UNF JMNUT	1
18	48598-12	S KEY 1/4X3/4	1
19	48598-13	S KEY 3/16X3/4	1
20	64006-2	LCKWSHER-HEL 5/16	12
21	64123-107	BOLT-HEX 5/16-18X7/8	12
22	48598-14	S SHIM .003	A/R
23	4859815	S SHIM .005	A/R
24	188006-04	S REDUCER	1
25	188006-05	S PIPE PLUG	2

ITEM	PART No.	DESCRIPTION	QTY

PART NO.	DESCRIPTION	FIGURE/ITEM
00228	DECAL-HYD RESERVOIR	13- 1
00253	DECAL TIRE PRESSURE	13- 3
00286	DECAL-WARNING	13-12
00437	LABEL,MADE IN AMERICA	13-11
00442	LABEL,MAINWARN-LYNX	13- 6
00443	LABEL,DISCHARGE-LYNX	13-13
00444	LABEL,FUEL-LYNX	13- 2
00445	LABEL,FWD/REV-LYNX	13- 7
00446	LABEL,PARK/DRIVE-LYNX	13- 5
00455	LABEL-LYNX 2000	13- 4
00456	LABEL-TOWER	13-10
00461	LABEL,CNTRL PANEL-LYNX	13-16
00470	LABEL-HEIGHT OF CUT	13- 8
00500	LABEL, SPRING WARNING	13-17
09007-04	S HSE .5 X .25 X 30	6- 9
108009-03	CONTROL-CHOKE	14- 7
108029	PLUG,MAGNETIC	2-28
108035-09	ELBW-ADJ3/8 37DEGX7/16	2-10
108046	FILTER ELEMENT	2-24
108055	BATTERY	14-16
		15- 7
108057	THRUST BEARING 1-1/4ID	5- 6
108061-01	CABLE ASSY,BAT TO GRD	15- 8
108061-02	CABLE ASSY,POSITIVE	15- 3
108061-03	CABLE ASSY 26 GROUND	15- 2
108061-10	CABLE-BATTERY 49" LONG	15- 5
108063	BEARING	5-26
108103	FILLER-BREATHER ASSY	2- 2
108194-14	FLEX TRIM-26.88	4-24
108207	COOLER OIL	2-23
		6-22
108264	MUFFLER, B&S 493963	1-25
108266	ENG-B&S 16HP HOR	6-24
		15- 1
108267	SWITCH-OIL PRSSRE NC	6-30
112134	CLIP, SEAT SPRING	4-33
112421	S WHEEL HALF	8-39
112422	S WHEEL HALF, VALVE SD	8-40
118035	SPRING	4-34
118123	S TIRE&TUBE 9X3.5 - 4	8-34
118124	S TUBE 9 X 3.50 - 4	8
128010	KEY SWITCH	14- 4
128037	RELAY	14-23
138011	BALL JOINT	3-23
138040	CLIP-HOOD ROD	4-31
148034-01	INSUL.GROMMET 1" I.D.	6-19
148034-03	INSUL.GROMMET 2.5 I.D.	6-12
148040	S TIRE 20X10.0-10	5-22
148045	WHEEL&TIRE 11X4.0-5	5-14
148046	S ROLLER BRG 3/4 ID	5-18
148047	S FLANGE BRG 3/4 ID	5-16
148048	S RIM ASM 5.0 DIA	5-17
148049	S TIRE 11X4.0-5	5-15
148082-20	FUSE 20 AMP	14-22
148322-01	KNOB-3/8-16	7-43
158001-03	CHAIN, 12.74 LONG	9-10
158085-01	BUSHING-PULLEY 1" ID	7- 5
158085-02	BUSHING,PULLEY .75 DIA	7-40
158094-03	CTRL-THROTTLE 56.13"	14-21
158140	SEAT SLIDE RAILS	4-22
158215	ENGINE-B&S V16 HOR UNI	1-44
173026	SPACER-FUSE BLOCK	14-11
178092-13	S-SINGLE SWITCH BLANK	14- 3
178141	LATCH-LEVER	4-17
178150	DIODE	14-32
181002	PULLEY-SNGL GRVE 5.00	7-17
181003	PULLEY-DBL GRVE 4.80	7- 6
181006	PULLEY-SNGL GRVE 6.40	1-10
181008	PULLEY-SNGL GRVE 7.80	1-17
181009	PULLEY	7-60
182001	SCREEN GRASS BOX	9- 4
182002-01	S BLADE-CUTTER	8-20
182017	BRKT-GEAR BOX	7-16
182032	BAND-GRASS BOX	9- 5
182035	BRKT-IDLER PIVOT	7-12
182044	PLATE SPRING	7-15
182048	PLATE COAST	3-42
182052	BRKT-GRASS BOX	9-30
182077	SCREEN-FRONT	4- 9
182107	SUPPORT-COOLER	6-23
182115	LINK BRAKE	3-35
182117	SUPPORT-FUEL TANK	6-15
182121	STOP-FOOT	7-51
182122	SHIELD-HEAT	4- 4
182123	DEFLECTOR-HEAT	9-32
182157	PLATE-ENGINE	1-42
182158-01	FENDER-LH	4- 8
182158-02	FENDER-RH	4
182164	PLATE-FILTER	4-12
182168	BRKT-MUFFLER	1-27
182179	SLIDE-GRASS	19- 1
182180	SLIDE-GRASS CENTER	19- 2
182182	SHIELD-HEAT B&S V-TWIN	6- 3
182183	BRACE-ENGINE	6-25
182205	GUARD-MUFFLER	1-21
182206	BRKT-GBOX DOOR	19- 6
182220	BRKT-ROD CLIP	4-30
183001	IDLER PULL ROD	8- 6
183002	SHAFT	7-34
183008	PIN, CLEVIS	7-57
183009	GUIDE-BELT	7-18
183013-01	ROD-LH TURNBUCKLE	9-17
183013-02	ROD-RH TURNBUCKLE	9-20
183019	TIE ROD, 3/8X1-3/4	3-40
183020-02	CONTROL LINK-RIGHT	3-18

PART NO.	DESCRIPTION	FIGURE/ITEM
183020-03	LINK-CLUTCH	3-24
183021-01	HANDLE-LH	3
183021-02	HANDLE-RH	3-21
183022	SHAFT-JACK	1-16
183027	STUD-IDLER	1-36
183030	RETAINER-AXLE	5- 9
183036	ROD-PIVOT	9-27
183037	TUBE-EXHAUST	1-29
183038	BOLT-EYE 3/8-16	7-54
183039	ROD-GBOX DOOR	19- 7
183040	SPACER-.75IDX1ODX.5LNG	5-13
183041	CATCH-SEAT	4-11
186004	DISCHARGE CHUTE	7-37
186005	BLOWER COVER	7-41
186007	CASTER SUPPORT	8-28
186008	BLOWER PROP	7-38
186009	IDLER ARM	7-24
186010	IDLER ARM	7- 8
186012	BELT GUIDE	7-31
186014	SWITCH LEVER	3-44
186015	FRAME, GRASS BOX	9-23
186017	GBOX DUMP ROD	9-21
186021	GBOX DOOR PLATE	9-14
186023	PUMP ARM,LH	3
186024	PUMP ARM,RH	3-13
186026	BRAKE LEVER	3-39
186029	IDLER BRKT	3- 2
186030	ENGINE IDLER	1-35
		6-11
186031	NEUTRAL ARM	3-37
186034	BATTERY CLAMP	14-17
186035	CLUTCH BRACKET	1- 5
186037	SUPPORT PLATE	9-28
186039	SEAT PLATE	4-21
186040	REAR AXLE	5- 7
186041	HYDRO TANK	2- 1
186043	POWER UNIT ARM	1-54
186044	PIVOT PIN	1-53
186048	INTAKE RING	4-16
186052	STEERING ARM	3-26
186054	SPRING SUPPT LH	1
186055	SPRING SUPPT RH	1-56
		7-53
186060	S CASTER YOKE	5-11
186061	TUBE SUPPORT	9-29
186063	GBOX INLET TUBE	9-35
186064	S LYNX FRAME W/LABS	1- 9
		3-12
		5-25
		9-24
		14-20
186067	S LYNX LH PANEL W/LAB	4- 7
186068	S LYNX RH PANEL W/LAB	4-18
186069	S DRIVE WHEEL W/LAB	5-21
186070	S LYNX 42" DECK W/LABS	7-35
		8-43
186071	S LYNX 42" B-COV W/LAB	7-44
186075	S LIFT ARM W/LAB	1-60
		7-19
186076	S CONTROL PANEL W/LAB	14-26
188001	GRASS BOX & DOOR	9-37
188002	FUEL TANK, CLEAR	6- 5
188003	GRASS CATCHER BASKET	19- 3
188004-1	HOSE	9-33
188005	IDLER,3.5" FLANGED	7-50
188006	GEAR BOX 1.5:1 RATIO	7-13
188007	CAP-SWITCH LEVER	3-47
188010	BELT-BLOWER	10- 4
188011	SPRING-IDLER	7-25
188012-01	PAD-NON SLIP, LH	13- 9
188012-02	PAD-NON SLIP, RH	13-15
188013	FLANGE, 2-BOLT	7-27
188014	PILOT LAMP	14- 1
188016	FILTER HEAD ASSY	2-26
188019	CLUTCH-ELECTRIC	1- 4
188021	HINGE-GRASS BOX	9- 2
188025	SPRING-NEUTRAL ARM	3-36
		6-18
		7-14
188028	FOAM-GBOX INTAKE	9-36
188029	MANIFOLD, B&S #805403	1-30
188030	BELT-PUMP	10- 1
188032	BALL JOINT	3-20
188033-01	INSERT-GRIP 1/4-20	4-23
188034	STABILIZER	3-29
188035	BELT-ENGINE	10- 2
188039	GRIP-HANDLE	3-22
188040	BRG-PILLOW BLOCK 1.00"	1-15
188042	BEARING-6300	3-31
188052	SEAT-OPERATOR	4- 1
188053	CLAMP-BLOWER TUBE	9-34
188057	ASSY-ZERO TURN RH	2-18
		3-33
188058	ASSY-ZERO TURN LH	2- 8
		5-24
188059	TRNSMSN, BDU-10L-111	2- 7
188063-1	S RIM	5-23
188064	SPRING-EXTENSION 7.50	7-55
188065	BALANCE-DECK 48"	7-46
188068	SWITCH-PTO SWF-511.113	14- 2
2000015	GUIDE-SLOT	12-14
2000018	PLUG-BYPASS	12-56
2000020	PLUG-CHECK	12-42
2000028	SPRING-CHECK	12-45

PART NO.	DESCRIPTION	FIGURE/ITEM
2000029	SPRING-CHARGE RELIEF	12-65
2003002	SPOOL-BYPASS	12-55
2003005	ARM-TRUNNION	12-13
2003009	BEARING-TRUNNION	12-11
2003011	SPRING-BYPASS	12-54
2003014	SPRING-BLOCK	12-60
2003015	SPRING-PISTON	12-34
2003016	RING-WIRE RETAINING	12- 2
2003017	WASHER-BLOCK THRUST	12-23
2003018	SPACER	12- 4
2003019	WASHER-PISTON THRUST	12-35
2003040	HSG-CHARGE PUMP	12-63
2003041	BLOCK-CYLINDER	12-32
2003043	BEARING-SHAFT BALL	12- 3
2003044	BEARING ASSY	12-17
2003045	BEARING-SHAFT NEEDLE	12-20
2003052	RING-RETAINING, 100 PC	12- 6
2003053	HOUSING-TRANSMISSION	12-15
2003055	CENTER SECTION	12-19
2003060	GASKET-CENTER SECTION	12-38
2003071	BEARING-SHAFT JOURNAL	12-16
2003087	SWASHPLATE-VARIABLE	12-25
2003096	PISTON	12-33
23711	SPACER, TORSION SPRING	11-35
23770	SPACER, BRAKE	11- 9
31012A	ENGINE PULLEY	1-46
31026	PULLEY 4.8X1.00	8-12
31028-01	SPINDLE HOUSING	8-15
32345-02	BELT GUIDE	3- 4
32749	MOUNTING SPACER	11-18
33030-07	BUSHING, IDLER	1-38
33030-7	BUSHING, IDLER	8- 5
33049-03	BOLT-BLADE	8-22
33150	BODY, TURNBUCKLE 7/16	9-18
33179-02	SPINDLE	8-16
33181	SPACER-SPINDLE	1-18
35014N	MUFFLER CLAMP	1-58
36284	ASM IDLER ARM	8-11
36526	S CASTER YOKE W/LABEL	8-30
38010-1A	IDLER PULLEY	7- 3
38264	WHEEL ASSY 9X3.5-4.00	8-33
38268	S S.HUB ASSY	8-35
38273	S ROLLER BEARING	8-38
38274	S BEARING RETAINER	8-36
38297	IDLER, 5"OD FLANGED	1-32
		8- 4
38315	NUT-SPINDLE	8-18
38331	BELT-DECK DRIVE	10- 5
38348-01	BEARING-SPINDLE SEALED	8-14
38382	SWITCH-N.O.	14-30
38383	SWITCH-N.C.	14-28
38384	BOOT-SWITCH	14-29

PART NO.	DESCRIPTION	FIGURE/ITEM
38442	BELT, PTO CL-48"	10- 3
38471-04	S FOAM CLOSED CELL 6.5	4-26
38471-05	S FOAM CLOSED CELL 17"	4-25
38665	SOLENOID	14-12
		15- 4
43119	SPACER	5-19
43180	BUSHING, SPANNER	8-42
44090	DISC, BRAKE	11-34
44094	ARM,BRAKE ACTUATOR(LH)	11-24
44101	PIN, COTTER 3/32 X 3/4	11-31
44127	PIN, BRAKE ACTUATING	11-32
44130	WASHER	11-29
44132	PUCK, BRAKE	11-28
44134	PLATE, PUCK	11-27
44142	NUT, CASTLE	11-30
44143	KEY, HI PRO 3/16 X 5/8	11-33
44147	BALL BEARING	11- 8
44232	BALL BEARING	11-20
44269	PIN, SPRING	11-17
44276	BOLT	11-39
44350	HYDRO MOUNT HOUSING	11- 2
44351	BRAKE SHAFT (SPLINED)	11-10
44352	SPLINED REDUCTION GEAR	11- 3
44353	11 TOOTH INPUT GEAR	11-22
44354	RETAINING RING	11-21
44355	BEARING SPACER	11-19
44358	SPLINED DRIVE GEAR	11- 4
44359	E-RING	11-11
44361	BALL, 3/8" DIAMETER	11-12
44366	BOLT, 1/4-20 X 2-1/2"	11-14
44371	WASHER	11-16
44613	ARM,BRAKE ACTUATOR(RH)	11
44835	TYPE "O" GREASE	11-23
48024-1A	S NIPPLE,PIPE 1-1/2 LG	2-27
48030N	HOUR METER ASSEMBLY	14- 6
48037A	BOOT, BATTERY TERMINAL	15- 6
48048A	BEARING SLEEVE	5-27
48049A	THRUST BEARING	5- 8
48053-2A	BEARING, FLANGED	8-27
48086	MALE ELBOW	2- 4
48089-04	STRAIGHT THREAD O RING	2-13
48089-05	FTG-STRAIGHT, MALE ORB	2- 6
48109N	BALL JOINT	3-16
48228-2A	CABLE CLIP 3/4 W/INSTN	1-64
48228A	CABLE CLIP-INSULATED	4-27
		6-29
48310	S BUSHING,FUEL TANK	6- 6
48311	S VALVE,FUEL TANK	6- 7
48393	PULLEY-V IDLER	3- 6
48400	AMMETER-30 AMP	14- 5
48450-07	FOAM 1.0X28.0X.5THICK	6-31
48450-09	FOAM-.5X12.1X.5	4-15
48587	S CAP, FUEL TANK	6- 4

PART NO.	DESCRIPTION	FIGURE/ITEM
62464-7A	WASHER,THRUST 1.0X1.56	1-63
		5- 5
62589	YOKE, BRAKE	11-25
62681	ASSY, AXLE	11- 5
62768	AXLE CARRIER HOUSING	11- 1
64001-10	NUT-HEX JAM 7/16-20	9-19
64001-2	NUT-HEX JAM,3/8-24	3-17
64001-7	NUT-HEX JAM,3/8-24 LH	3-19
64006-01	LOCKWSHR-HELICAL 1/4	1-20
64006-02	LOCKWSHR-HELICAL 5/16	2-20
		3-43
64006-03	LOCKWSHR-HELICAL 3/8	1-13
		6-13
		7-10
		8- 2
		9-25
64006-04	LOCKWSHR-HELICAL 5/8	7-21
64006-06	LOCKWSHR-HELICAL 7/16	1- 2
64018-9	BLT-CRG 5/16-18X3/4 G5	7-52
64025-02	NUT-HEX 5/16-18	2-19
64025-05	NUT-HEX 3/8-16	7-28
64025-15	NUT-HEX #10-24 KEPS	14-10
64025-16	NUT-HEX 5/8-18	7-20
		8-47
64025-26	NUT-HEX #6-32 KEPS	4-32
64123-06	BLT-HEX 1/4-20X3/4 U	7- 4
64123-100	BLT-HEX 3/8-16X2-1/4	3- 9
64123-118	BLT-HEX 5/8-11X5-3/4	5-12
64123-12	BLT-HEX 5/16-18X2-1/2	1-40
		2-16
64123-122	BLT-HEX 7/16-20X1-1/2	1- 1
64123-128	BLT-HEX 5/16-18X5/8	7-42
64123-137	BLT-HEX 5/8-18X2	7-22
64123-138	BLT-HEX 3/8-16X3-3/4	3-48
64123-141	BLT-HEX 5/16-18X6	2-14
64123-15	BLT-HEX 3/8-16X3/4	6-14
		7-11
		8-37
64123-159	BLT-HEX 3/8-16X2-1/2	7- 7
		8-44
64123-16	BLT-HEX 3/8-16X1-1/4	3-11
64123-166	BLT-HEX 1/2-13X5-1/2	8-31
64123-175	BLT-HEX 1/4-20X1-5/8	7-39
64123-193	BLT-HEX 1/4-20 X 7"	14-18
64123-194	BLT-HEX 5/16-18X5-1/2	2-15
64123-21	BLT-HEX 3/8-24X1-1/4	1-50
64123-38	BLT-HEX 7/16-14X1	6-27
		8-29
64123-47	BLT-HEX 5/16-18X1-1/4	1-57
64123-50	BLT-HEX 3/8-16X1	3-25
		7-29
		9-12
64123-54	BLT-HEX 5/16-18X3/4	1-52

PART NO.	DESCRIPTION	FIGURE/ITEM
64123-56	BLT-HEX 5/16-18X2	9- 6
64123-61	BLT-HEX 5/16-18X1-3/4	2-17
		3-45
		9- 8
64123-67	BLT-HEX 3/8-16X2	3-32
64123-68	BLT-HEX 5/16-18X1	1- 6
		7-48
		19- 9
64123-69	BLT-HEX 5/16-18X1-1/2	3-28
		19- 8
64123-70	BLT-HEX 3/8-16X1-1/2	1-14
		7-26
64123-82	BLT-HEX 3/8-16X2-1/2	5- 3
64123-87	BLT-HEX 3/8-16X1-3/4	1-28
		1-31
		3- 7
		8- 1
64123-89	BLT-HEX 1/4-20X3/4	1-19
64123-95	BLT-HEX 1/2-13X3-1/4	1-59
64123-171	BLT-HEX 3/8-16X3-1/2	7-45
64139-02	BLT-WLF 1/4-20X1/2	4- 2
		4-11
		6-20
		14-13
64139-08	BLT-WLF 5/16-18X3/4	4-13
64139-17	BLT-WLF 1/4-20X5/8	19- 4
64140-1	COTTER PIN-1/8X1	9-13
64141-11	NUT-WLF 3/8-16 CL	9-26
64141-2	NUT-WLF 1/4-20	4-14
		6-21
		14-19
		19- 5
64141-3	NUT-WLF 3/8-24	3-15
64141-4	NUT-WLF 3/8-16	1-37
		3- 3
		4-10
		6-28
		7- 1
		9-27
64141-6	NUT-WLF 5/16-18	1- 8
		3-27
		4- 5
		7-36
		14-27
64141-9	NUT-WLF 5/16-18 CL	9- 1
64141-11	NUT-WLF 3/8-16 CL	7-56
		19-10
64144-13	RETAINING RING	5- 4
64144-38	SNAP RING	8-17
64151-11	7/16-14 HEX LOCKNUT	8-23
64188-30	PIN-CLEVIS, .50X1.50	7-32
64197-005	BOLT TR 3/8-16X1-1/4	8-13

PART NO.	DESCRIPTION	FIGURE/ITEM
64151-15	5/16-18 CL HEX NUT	1-43
		3-41
64151-18	3/8-16 CL HEX NUT	1-39
64151-6	5/8-11 HEX LOCK NUT	5-10
64151-7	1/2-13 HEX LOCK NUT	1-33
64152-21	6-32X1/2LG RD HD SC	4-29
64152-23	1/4-20X3/8 LG SP SCREW	4- 3
64152-27	1/4-20X5/8 LG SP SCREW	1-26
64152-39	10-24 X 2.25 SCREW	14- 8
64152-42	#8-18X.38 S-TAP SCREW	1-22
64152-44	5/16-18X3/4 HEX HD SCR	9-38
64152-46	SCR-SLT HH 10-24X1/2	2- 3
		14-25
64152-47	SCR-SLT HH 10-24X3/8	14- 9
64152-49	SCR-SLT HH 10-24X3/4	14-31
64158-03	EYE BOLT	6-17
64163-01	5/8IDX1-1/2ODX3/32THK	8-21
64163-03	17/64IDX5/8ODX18GA THK	6- 2
64163-07	1-1/32X1-3/4X1/4 WASH	1-11
		1-49
		8-25
64163-19	33/64X1-1/4X12GA WASHR	1-61
		9-22
64163-22	1-1/32X1-3/4X1/2 WASHR	1-47
		8-24
64163-29	21/64X1X11GA.WASHER	9- 9
64163-31	WASH.25/64X1X12 GA	1-12
64163-36	WASHER 1X33/64X.187	4-20
64163-43	WSHR.443/.454X1X11GA	6-26
64163-55	WSHR .328X.75X14 GA	1-41
64163-63	WSHR .453X1.63X.313	1- 3
		1-48
64163-65	WSHR .890X1.375X18GA	8- 9
64163-67	WSHR .516X1X12GA	1-34
64163-69	WASHER .391X.88X10 GA	3-30
64164-02	KEY 3/16X3/16X1 SQ	7-30
64164-12	1/4X1/4X1 SQ END KEY	1-45
64164-13	1/4X1/4X2 SQ KEY	1-51
64166-11	SHOULDER BOLT	9-16
64166-14	BLT SH 3/8-16X.49X1.25	3- 1
		7- 9
64166-16	SHLDR BOLT,3/8-16X1.38	3-34
64166-5	1/2X1 3/8-16 SHLD BOLT	4-19
64168-1	HAIRPIN COTTER	7-33
64168-2	HAIRPIN COTTER	1- 7
		9-15
64173-04	QUICK PIN	8-26
64187-03	WHEEL NUT 1/2-20	5-20

PART NO.	DESCRIPTION	FIGURE/ITEM
64197-007	BOLT-TDFM 12-24X3/8	4-28
64205-013	BLT-METRIC M6-1X12	6- 1
64205-016	BLT-METRIC M5-0.80X25	3-10
64209-03	SPRING WASHER .67 ID	8-48
64211-01	WSHR-ALUM,BACKING	9-39
64215-06	RIVET-POP IFI# 48	9- 3
64221-04	E-RING .875	8- 8
64229-01	LOCK NUT-NYLON 1/4-20	14-14
64229-02	LOCK NUT-NYLON 5/16-18	8- 7
64237-01	LOCKNUT-NYLON M5X0.8	3-14
65103A	BEARING BUSHING	8-10
68156A	HANDLE KNOB, BLACK	3-38
69064-01	FTG-NPTF 9/16-18	2-25
69066-01	FTG,SWIVEL TEE 9/16-18	2-12
69067-01	FTG-SWIVEL 9/16-18	2- 5
69208-01	S HOSE-3/8 X 11.75	2-22
69208-02	S HOSE-3/8 X 14.25	2-11
69208-04	S HOSE-3/8 X 21.00	2-21
69208-05	S HOSE-3/8 X 23.50	2- 9
75075A	DECAL,CPSC "DANGER"	13-14
85010N	ZERK GREASE FITTING	1-55
		5- 1
		8-45
88042N	HOSE CLAMP	6- 8
9001214	BALL	12-44
		12-66
9004101	O-RING	12-62
9004175	O-RING	12-57
9004201	O-RING	12-43
		12-53
9004800	PIN ST HDLS	12-37
9005001	PLUG PIPE	12-18
9005110	PLUG ST THD	12-46
		12-52
		12-59
9005200	PLUG PLASTIC	12-36
9007375	SCREW-SOC HD CAP	12-67
9007614	SCREW-SOC HD CAP	12-47
9008000	SEAL-LIP	12- 5
		12-12
		12-21
B222902	DEFLECTOR-LOUVERED	1-23
B392154	ASM-SPARK ARRESTER	1-24
J1020594	SHAFT-MOTOR	12-22
J1040976	BEARING-CRADLE	12- 8
J1041008	GEROTOR ASSY	12-64
J4030673	SHAFT-PUMP	12- 1

RANSOMES

BOB-CAT®

RANSOMES INC.
ONE BOB-CAT LANE
JOHNSON CREEK, WI 53038